DLA Troop Support

Technical Data Package

Solicitation SPM3S1-11-R-7074

Meal, Ready-To-Eat (MRE) and Humanitarian Daily Ration (HDR)

Table of Contents

Tab One:

ACR-M-032, Meal, Ready-to-Eat (MRE), Assembly Requirements, 19 November 2010

Tab Two:

MIL-PRF-44073 Packaging of Food in Flexible Packages

Tab Three:

Section C - MRE Description Specification
Technical requirements for assembled MREs and CFM component items

a. Part I- - Technical Data for MRE Assembly
b. Part II – Technical Data for Contractor Furnished Material (CFM) Components

Tab Four:

Section D - MRE Packaging and Marking
Packaging requirements for assembled MREs and CFM component items

a. Part I- - Technical Data for MRE Assembly
b. Part II – Technical Data for Contractor Furnished Material (CFM)

Tab Five:

Section E – MRE Inspection and Acceptance
Inspection and Acceptance requirements for Assembled MREs and CFM components

Tab Six:

Humanitarian Daily Ration (HDR) specification requirements

SECTION C

The Meal, Ready-to-Eat™ (MRE™) provides an operational ration for the individual.

C-1 ITEM DESCRIPTION

ACR-M-032, MEAL, READY-TO-EAT™ (MRE™), ASSEMBLY REQUIREMENTS

C-2 ASSEMBLY REQUIREMENTS

A. Components. The components are specified in table I.

TABLE I. Components

Component	Reference
Entrées	
Asian Style Beef Strips with Vegetables	PCR-A-005
Beef Ravioli in Meat Sauce	PCR-B-021
Beef Roast with Vegetables	PCR-B-035
Beef Stew	PCR-B-020
Brisket Entrée (Gravy with Seasoned Beef Brisket Slices)	PCR-B-050
Cheese Tortellini in Tomato Sauce	PCR-C-020
Chicken Fajita	PCR-C-055
Chicken, Noodles and Vegetables, in Sauce	PCR-C-021A
Chicken Pesto Pasta	PCR-C-069
Chicken with Tomatoes and Feta Cheese	PCR-C-077
Chili and Macaroni	PCR-C-027
Chili with Beans	PCR-C-062
Meatballs in Marinara Sauce	PCR-M-015
Mexican Style Chicken Stew	PCR-M-016
Penne with Vegetable Sausage Crumbles in Spicy Tomato Sauce, Made with Whole Grain Penne Rigate	PCR-P-036, Type II
Rib Shaped Barbecue Flavor Pork Patty	PCR-R-013
Pork Sausage in Cream Gravy	PCR-P-047
Pork Sausage Patty, Maple Flavored	PCR-P-045
Ratatouille (Mixed Vegetables and Penne)	PCR-R-012
Sloppy Joe Filling	PCR-S-013

TABLE I. Components - Continued

Component	Reference
Southwest Beef and Black Beans	PCR-S-018
Spaghetti with Beef and Sauce	PCR-S-002
Tuna, Flexible Pouch, Chunk, Light, Water Packed, Lemon Pepper, Regular Salt/Sodium Level	A-A-20155D, Type B, Form I, Color a, Packing Media 1, Flavor 1, Salt/Sodium Level (a)
Vegetable Lasagna	PCR-V-008
Starches and Soups	
Cornbread	PCR-C-075
Cornbread Stuffing	PCR-C-066
Granola	PCR-G-003A
With Milk and Blueberries	Type I
With Milk and Bananas	Type II
Potato Cheddar Soup Flavored with Bacon	PCR-P-046
Potatoes au Gratin	PCR-P-048
Potatoes, Mashed, Garlic	PCR-P-011A, Flavor II
Refried Beans	PCR-R-007
Rice	PCR-R-001A
Fried Rice	Type IV
Santa Fe Style Rice and Beans	PCR-S-019
Snack Bread, Fortified	PCR-S-009C
Wheat Snack Bread, Single or Twin Pack	Type I, Style A or B
Italian Bread Sticks, Single Pack	Type IV, Style A
Multigrain Snack Bread, Single Pack	Type V, Style A
Tortillas	PCR-T-008
Fruits	
Apple Pieces in Spiced Sauce	PCR-A-001A
Cobbler, Cherry Blueberry	PCR-C-058, Flavor I
Fruits, Osmotically Dried	A-A-20299B
Sliced Cranberries, Not Fortified	Type VII, Fortification a
Raisins, Not Fortified	Type IX, Fortification a

TABLE I. Components - Continued

Component	Reference
Fruits, Wet Pack	PCR-F-002C
Pears, Sweetened, Sliced or Diced	Type IV
Mixed Fruit, Sweetened	Type V
Applesauce, with Raspberry Puree, Sweetened, Reg.	Type VI
Applesauce, Carbohydrate Enhanced, Sweetened, Reg.	Type VII
Applesauce, with Mango and Peach Puree, Sweet, Reg.	Type VIII
Desserts and Snacks	
Beef and Turkey Snacks, Cured	A-A-20298B
Beef, Moist Cured/Kippered, Chopped and Formed, Strips, Smoked	Variety A, Type II, Style a, Class 1, Flavor (a)
Turkey, Moist Cured/Lactate, Natural Style, Nuggets, Smoked	Variety B, Type III, Style b, Class 4, Flavor (a)
Cakes and Brownies, and Muffin Tops	PCR-C-007D
Cakes	Type I
Vanilla Pound	Flavor 1
Lemon Poppy Seed Pound	Flavor 6
Spice Pound	Flavor 7
Almond Poppy Seed Pound	Flavor 8
Carrot Pound	Flavor 10
Marble Pound	Flavor 11
Brownies	Type II
Fudge Brownie with Chocolate Drops	Flavor 1
Muffin Tops	Type III
Chocolate Banana Nut	Flavor 1
Maple	Flavor 2
Cheese Spread, Cheddar; Fortified	PCR-C-039
Plain	Type I
With Jalapeno Peppers	Type II
With Bacon	Type III

TABLE I. Components - Continued

Component	Reference
Cookies, Regular, Individual Serving Package, Crisp	A-A-20295C, Type I, Class 1, Bake Type a
Sugar, Patriotic	Style D, Shape (b)
Oatmeal, Plain	Style I, Flavor 1
Chocolate Chip, Plain	Style J, Flavor 1
Kreamsicle	Style K
Toffee Crunch	Style L
Crackers, Fortified	PCR-C-037
Plain	Type I
Vegetable	Type II
Dessert Powder, Pudding, Regular, Instant,	A-A-20344A, Type I,
Nonfat Dry Milk	Preparation Method C, Style 1
Vanilla	Flavor a
Chocolate	Flavor b
Filled Bakery Item	MIL-DTL-32221A
Cinnamon Bun	Type II
Apple Turnover	Type III
First Strike™ Bar	PCR-F-001
Chocolate, Regular	Flavor I, Style A
Apple-Cinnamon, Regular	Flavor II, Style A
Jelly, Fruit, Standardized, Single, Regular,	A-A-20078C, Type I, Style 1,
U.S. Grade A	Finished Product Quality a
Apple	Kind A
Grape	Kind M
Nuts, Shelled, Roasted	A-A-20164D
Peanuts, Virginia Type or Runner Type, Dry Roasted, Salt	Type V, Style A
Cashews, Halves (Splits), Jalapeno	Type VI, Size 2, Style C
Almonds (Unblanched), Flavored (Smoked)	Type IX, Style C
Nut and Fruit Mix	PCR-N-003
Nut and Raisins	Type I
Nut and Raisins with Pan Coated Chocolate Disks	Type II
Peanut Butter and Peanut Spread, Regular,	A-A-20328A, Class A, Type a,
Stabilized, Fortified	Fortification b
Peanut Butter, Smooth	Style I, Texture 1
Peanut Butter, Chunky/Crunchy	Style I, Texture 3
Peanut Spread, Smooth, Chocolate	Style II, Texture 1, Flavor 2

TABLE I. Components - Continued

Component	Reference
Preserves (or Jams), Fruit,	A-A-20079C, Type I,
U.S. Grade A	Finished Product Quality a
Single Fruit, Blackberry, Regular	Group I, Flavor A Style 1
Single Fruit, Strawberry, Regular	Group I, Flavor Q, Style 1
Ranger Bar	PCR-R-008B
Caramel Apple	Flavor II
Chocolate Covered Chocolate Chip	Flavor III
Cran-apple	Flavor IV
Banana Nut	Flavor V
Snack Foods	A-A-20195D
Pretzels, Bavarian or Hard, Rods, Sticks,	Type II, Style A, B, C (Flavor 1)
Twists (Original) or Nuggets, Plain, Salted	D (Flavor 1) or E (Flavor 1)
Filled Pretzels, Cheddar Cheese or Nacho Cheese	Type II, Style F, Flavor 1 or 2
Baked Snack Crackers, Cheddar Cheese or Hot and Spicy Cheese	Type V, Flavor 1 or 2
Toasted Corn Kernels, Plain, Salted	Type VI, Flavor 1
Cheese Filled Crackers, Cheddar Cheese or Pepperoni Pizza	Type VII, Flavor 1 or 2
Tortilla-type Filled Crackers	Type VIII, Flavor 1
Toaster Pastry, Regular, Shelf Stable, Not fortified,	A-A-20211B, Type I,
Rectangular, Single Serving	Fort. b, Shape i, Servings a
Frosted Brown Sugar Cinnamon	Style B, Flavor 3
Chocolate Chip	Style B, Flavor l2
Candy	
Candy and Chocolate Confections	A-A-20177E
Toffee, Chocolate Flavored, Roll or Cube	Type II, Style A or B
Pan Coated Candy	Type VI
Disks, Chocolate, Plain	Shape A, Flavor 1
Disks, Fruit Flavored, Original	Shape A, Flavor 2, Fl. Style a
Disks, Fruit Flavored, Berry	Shape A, Flavor 2, Fl. Style b
Disks, Fruit Flavored, Sour	Shape A, Flavor 2, Fl. Style d
Disks, Peanut Butter	Shape A, Flavor 4
Oval/Round, Chocolate with Peanuts	Shape B, Flavor 1
Licorice Style Candy, Bite Size, Cherry	Type X, Shape B, Flavor 1
Caffeinated Mints, Round Tablets	Type XII, Style A
Peppermint	Flavor 1

TABLE I. Components - Continued

Component	Reference
Beverages	
Beverage Base, Powdered	A-A-20098E
Sweetened with Nutritive Sweetener	Type II
Small Flat Pouch	Design E
Orange, Fortified with Ascorbic Acid and Maltodextrin	Flavor 1, Formulation d
Lemon-Lime, with Ascorbic Acid and Maltodextrin	Flavor 4, Formulation d
Tropical Punch, with Ascorbic Acid and Maltodextrin	Flavor 10, Formulation d
Sweetened with Non-nutritive Sweetener	Type III
Lap or Fin Seal Pouch	Design D
Orange, with Vitamin C and Calcium	Flavor 1, Formulation h
Beverage Powder, Carbohydrate Electrolyte, Flat Pouch	PCR-B-013A, Design A
Fruit Punch	Flavor I
Grape	Flavor II
Lemon-Lime	Flavor III
Orange	Flavor IV
Cocoa Beverage Powder, Fortified,	PCR-C-041, Design B
Flat Interlocking Closure Pouch	
Cocoa Beverage Powder, Sugar Sweetened,	A-A-20189B, Type I, Style B,
Without Marshmallows, Chocolate Hazelnut,	Flavor F,
Flat Interlocking Closure Pouch	Design B
Dairyshake Powder, Fortified with Calcium and Vit. D	PCR-D-002A
Flat Interlocking Closure Pouch	Design B
Vanilla	Flavor I
Chocolate	Flavor II
Strawberry	Flavor III
Strawberry Banana	Flavor IV
Drink Mixes, Coffee (Flavored and Unflavored),	A-A-20336A
Flavored Instant Cappuccino, Regular	Type V, Style A
Flat Interlocking Closure Pouch	Design B
French Vanilla	Flavor 1
Mocha	Flavor 2
Irish Cream	Flavor 4

TABLE I. Components - Continued

Component	Reference
Other Items	
Bag, Hot Beverage	MIL-PRF-32176
Barbecue Sauce, Plain/Regular, Without Fruit Purees	A-A-20335A, Flavor I, Type B
Fork, Knife and Spoon, Picnic (Plastic), High Impact	A-A-3109B, Type IV, Item 13
Spoon, MRE, 7-inch (Brown)	
Hot Sauce, 1/8 fluid ounce pouch	A-A-20097F
Extra Hot 4x	Type II
Mayonnaise, Salad Dressing and Tartar Sauce	A-A-20140D
Mayonnaise, Fat Free	Type I, Style C
Natural Butter Flavor Granules, Spray Dried, Regular	A-A-20351, Type I, Style A,
2 gram packet	Package 1
Ration Supplement, Flameless Ration Heater (FRH)	MIL-R-44398B
Spices and Spice Blends	A-A-20001A
Red Pepper, Ground	Type I, Class Z, Form 1
Seasoning Blend, Salt Free, with Herbs and Citrus	Type II, Class D, Blend (1)
Syrup, Table, Imitation Maple, Regular Calorie	A-A-20124D, Type IV,
	Flavor A, Style 1

B. Accessory components. Accessory components are specified in table II.

TABLE II. Accessory Components

Component	Reference	Acc. Pack
Chewing Gum, Tablet, Regular, Without Caffeine, Xylitol Sweetened, Peppermint or Cinnamon 1/	A-A-20175C, Type I, Size B, Style (1), Class 3, Flavor a or c	All
Hand Cleaner (towelette), Unscented, Water Based	A-A-461B, Type II	All
Matches, Safety	A-A-59489A, Type I, Class B	A
Salt, Table, Iodized, 4 grams	NaCl Monograph	All
Toilet Tissue, Institutional	A-A-59594, Style II, Type A, Sheet Size b	All
Coffee, Soluble, Freeze Dried, Reg.	A-A-20184B, Type III, Style A	A, C
Creamer, Non-Dairy, Dry, Regular, Original	A-A-20043C, Style I, Flavor A	A, C
Sugar, 1/7 ounce	A-A-20135D, Type I, Style A	A
Beverage Base (Powdered) 1/ Sweetened with Non-Nutritive Sweetener, Lap or Fin Seal Pouch	A-A-20098E Type III Design D	B
Lemonade, Non-fortified	Flavor 8, Formulation a	
Raspberry, Non-fortified	Flavor 13, Formulation a	
Sugar Substitutes, Non-Carbohydrate Sucralose	A-A-20178A, Type IV	C

1/ Flavors shall be procured in equal quantities and assembled in a uniform distribution.

C. Contents. The contents of each meal are specified in table III.

TABLE III. Contents

Menu #1	Menu #2	Menu #3
Chili with beans	Chicken fajita	Chicken with noodles
Cheese spread, Jalapeno	Refried beans	Snack bread, wheat, single
Corn bread	Brownie	Peanut butter, smooth
Crackers, plain	Cheese spread, Jalapeno	Jelly/Jam 1/
Ranger bar 1/	Tortillas	Nuts and raisins with choc.
Beverage, carb fortified 1/	Nuts 1/	Beverage, carb fortified 1/
Spice, red pepper	Drink, cappuccino, Irish Cr.	Hot sauce
Accessory packet A	Spice, seasoning blend	Accessory packet A
Spoon	Accessory packet B	Spoon
Flameless ration heater	Spoon	Flameless ration heater
Hot beverage bag	Flameless ration heater	Hot beverage bag
	~~Hot beverage bag~~	

Comment [C1]: Natick ES11-051, change 02, 09-Feb-11, to delete HBB from some menus.

Menu #4	Menu #5	Menu #6
Pork sausage with gravy	Chicken, tomato, feta	Beef roast with vegetables
Granola 1/	Cornbread stuffing	Peanut butter spread, choc.
Cheese spread, plain	Fruit, dried 1/	Cobbler, cherry blueberry
Crackers, plain	Cheese spread, plain	Cookies 4/
Toaster pastry 1/	Crackers, vegetable	Snack bread, wheat, single
Beverage, carb fortified 1/	First Strike™ Bar 1/	Cocoa
Accessory packet A	Beverage, carbo electro 1/	Accessory packet C
Spoon	Accessory packet A	Spoon
Flameless ration heater	Spoon	Flameless ration heater
Hot beverage bag	Flameless ration heater	Hot beverage bag
	Hot beverage bag	

Menu #7	Menu #8	Menu #9
Brisket entree	Meatballs marinara sauce	Beef stew
Potatoes, garlic mashed	Potatoes au gratin	Peanut butter, smooth
Cookies 4/	Cheese spread, plain	Jelly/Jam 1/
Cheese spread, plain	Snack bread, wheat, twin	Snack bread, multigrain
Crackers, plain	First Strike™ Bar 1/	Nut and raisins mix
Candy I 2/	Beverage, carb fortified 1/	Snack, pretzels 1/
Beverage, carbo electro 1/	Accessory packet C	Cocoa, hazelnut
Butter granules	Spoon	Hot sauce
Accessory packet B	Flameless ration heater	Accessory packet B
Spoon	Hot beverage bag	Spoon
Flameless ration heater		Flameless ration heater
~~Hot beverage bag~~		~~Hot beverage bag~~

Comment [C2]: Natick ES11-051,change 02, 09-Feb-11, to delete HBB from some menus.

Comment [C3]: Natick ES11-051, change 02, 09-Feb-11, to delete HBB from some menus.

Menu #10	Menu #11 Vegetarian	Menu #12 Vegetarian
Chili and macaroni	Vegetable lasagna	Penne spicy pasta
Cake, pound 3/	Fruit, wet pack 1/	Toaster pastry 1/
Cheese spread, bacon	Cookies 4/	Dessert powder, pudding 1/
Snack bread, wheat, twin	Peanut butter, chunky	Snack bread, wheat, single
Candy III 2/	Crackers, plain	Peanut butter, smooth
Beverage, carbo electro 1/	Candy I 2/	Beverage, carbo electro 1/
Spice, red pepper	Drink, cappuccino, Fr. Van.	Hot sauce
Accessory packet A	Hot sauce	Accessory packet A
Spoon	Accessory packet B	Spoon
Flameless ration heater	Spoon	Flameless ration heater
Hot beverage bag	Flameless ration heater	Hot beverage bag
	~~Hot beverage bag~~	

Comment [C4]: Natick ES11-051, change 02, 09-Feb-11, to delete HBB from some menus.

Menu #13 Vegetarian	Menu #14 Vegetarian	Menu #15
Cheese tortellini	Ratatouille	Mexican style chicken stew
Fruit, wet pack 1/	Cake, pound 3/	Santa Fe rice and beans
First Strike™ Bar 1/	Peanut butter, smooth	Snack, filled pretzels 1/
Peanut butter, smooth	Tortillas	Cheese spread, Jalapeno
Crackers, plain	Dairyshake 1/	Crackers, vegetable
Candy II 2/	Spice, seasoning blend	Candy II 2/
Beverage, carbo electro 1/	Accessory packet A	Beverage, carb fortified 1/
Spice, seasoning blend	Spoon	Spice, red pepper
Accessory packet B	Flameless ration heater	Accessory packet A
Spoon	Hot beverage bag	Spoon
Flameless ration heater		Flameless ration heater
~~Hot beverage bag~~		Hot beverage bag

Comment [C5]: Natick ES11-051, change 02, 09-Feb-11, to delete HBB from some menus.

Menu # 16	Menu #17	Menu #18
Pork rib	Sausage maple	Beef ravioli
Potato cheddar soup	Muffin top, maple	Cheese spread, plain
Beef snack	Cheese spread, plain	Snack bread, wheat, single
Peanut butter, smooth	Crackers, plain	Snack, corn nuts
Tortillas	Nut and raisins mix	Dried fruit 1/
Candy, caffeine mints	Beverage, sugar free, orange	Beverage, carb fortified 1/
Jelly/Jam 1/	Syrup	Hot sauce
Beverage, carb fortified 1/	Accessory packet A	Accessory packet C
BBQ sauce	Spoon	Spoon
Accessory packet B	Flameless ration heater	Flameless ration heater
Spoon	Hot beverage bag	Hot beverage bag
Flameless ration heater		
~~Hot beverage bag~~		

Comment [C6]: Natick ES11-051, change 02, 09-Feb-11, to delete HBB from some menus.

Menu #19	Menu #20	Menu #21
Sloppy Joe	Spaghetti with beef sauce	Tuna, lemon pepper
Fruit, wet pack 1/	Fruit, dried 1/	Tortillas
Snack, filled crackers 1/	Cheese spread, plain	Cake, pound 3/
Peanut butter, smooth	Snack, pretzels 1/	Snack, bake snack cracker 1/
Crackers, plain	Snack bread, multigrain	Nuts 1/
Jelly/Jam 1/	Candy III 2/	Dairyshake 1/
Bev, carbo electro 1/	Beverage, carb fortified 1/	Mayonnaise, fat free
BBQ sauce	Hot sauce	Spice, seasoning blend
Accessory packet A	Accessory packet A	Accessory packet B
Spoon	Spoon	Spoon
Flameless ration heater	Flameless ration heater	
Hot beverage bag	Hot beverage bag	

Menu #22	Menu #23	Menu #24
Asian beef strips	Chicken pesto pasta	Southwest beef and bl. beans
Peanut butter, chunky	Cheese spread, plain	Spiced apples
Jelly/Jam 1/	Snack bread, Italian	Muffin top, choc banana
Snack bread, wheat, single	Filled bakery item 1/	Turkey nuggets
Rice, fried	Cookies, patriotic	Cheese spread, Jalapeno
Candy I 2/	Beverage, carbo electro 1/	Tortillas
Cocoa	Spice, red pepper	Drink, cappuccino, Mocha
Accessory packet C	Accessory packet A	Accessory packet B
Spoon	Spoon	Spoon
Flameless ration heater	Flameless ration heater	Flameless ration heater
Hot beverage bag	Hot beverage bag	~~Hot beverage bag~~

Comment [C7]: Natick ES11-051, change 02, 09-Feb-11, to delete HBB from some menus.

1/ Flavors shall be procured in equal quantities and assembled in a uniform distribution. Wet pack fruit (Menus 11, 13, 19) include raspberry applesauce, carbohydrate enhanced applesauce, mango/peach applesauce, pears, and mixed fruit. Nuts (Menus 2, 21) include dry roasted peanuts, Jalapeno cashews and smoked almonds. Dairyshakes (Menus 14, 21) include vanilla, chocolate, strawberry and strawberry-banana. Jams and jellies (Menus 3, 9, 16, 19, 22) include blackberry, strawberry, apple and grape. Beverages with nutritive sweetener (Menus 1, 3, 4, 8, 15, 16, 18, 20) include orange, lemon-lime and tropical punch. Beverages with carbohydrate electrolyte (Menus 5, 7, 10, 12, 13, 19, 23) include fruit punch, grape, lemon-lime and orange. Dried fruit (Menus 5, 18, 20) include cranberries and raisins. Toaster pastries (Menus 4, 12) include brown sugar cinnamon and chocolate chip. Puddings (Menu 12) include vanilla and chocolate. First Strike™ bars (Menus 5, 8, 13) include chocolate and apple-cinnamon. Ranger bars (Menu 1) include caramel apple, chocolate cover chocolate chip, cran-apple and banana nut. Filled pretzels (Menu 15) include cheddar cheese and nacho cheese. Baked snack crackers (Menu 21) include cheddar cheese and hot and spicy cheese. Cheese filled crackers (Menu 19) include cheddar cheese, pepperoni pizza and Jalapeno. Granola (Menu 4) includes blueberries and banana. Filled bakery items (Menu 23) include cinnamon bun and apple turnover.

2/ Candy I (Menus 7, 11, 22) include chocolate toffee rolls, toffee chocolate cubes and licorice; Candy II (Menus 13, 15) include plain chocolate disks, chocolate with peanuts ovals and peanut butter disks; and Candy III (Menus 10, 20) include original, berry and sour fruit disks; shall be procured in equal quantities and assembled in a uniform distribution.

3/ Pound cakes (Menus 10, 14, 21) include vanilla, lemon poppy, spice, almond poppy, carrot and marble and shall be procured in equal quantities and assembled in a uniform distribution.

4/ Cookies (Menus 6, 7, 11) include oatmeal, chocolate chip, kreamsicle and toffee crunch. Cookies shall be procured in equal quantities and assembled in a uniform distribution.

SECTION D

D-1 PACKAGING

A. Components.

(1) Subassembly packet/accessory packet. The subassembly/accessory packet shall be a preformed packet or a form-fill-seal packet. Dimensions shall be sufficient to contain all components. Seals shall be a minimum 1/8 inch wide. A tear nick, notch or serrations shall be provided to facilitate opening the filled and sealed pouch. The average seal strength of the

packet seals shall be not less than 3.5 pounds per inch of width and no individual specimen shall have a seal strength of less than 3.0 pounds per inch of width. As an alternative to the seal strength requirement, the filled and sealed packet shall exhibit no rupture or seal separation greater than 1/16 inch or seal separation that reduces the effective seal width to less than 1/16 inch when tested for internal pressure resistance. The packet shall be made from polymeric films or film combinations with adequate strength and thickness to contain and protect the components. The water vapor transmission rate (WVTR) of the film shall not exceed 6.2 gm/m^2/24hrs/90%rh/100°F when tested in accordance with ASTM F 372, Standard Test Method for Water Vapor Transmission Rate of Flexible Barrier Materials Using an Infrared Detection Technique; ASTM E 96, Standard Test Methods for Water Vapor Transmission of Materials or Method 3030 of FED-STD-101, Test Procedures for Packaging Materials. The exterior color of the packet shall be clear or tan.

(2) Time-temperature indicator (TTI) label. The TTI label shall be a 3/4 inch square, bull's-eye type, pressure sensitive adhesive label. The TTI label shall have an activation energy (Ea) of 24–30 kcal/mole, be protected from ultraviolet radiation and have a shelf life of 1100 days at 80°F as pivot point.

(3) Meal bag. The meal bag shall be made from food grade, low density polyethylene (LDPE) tubing or tubing made from a blend of food grade, low density polyethylene (LDPE) and linear-low density polyethylene (LLDPE). Additives may be used in order to improve sealability, peelability, tear resistance or other attributes provided all additives are food grade and are certified by the FDA as approved for food contact. Polyethylene shall have a minimum thickness of 0.010 inch. Inside dimensions of the bag shall not exceed 8-1/8 by 13-1/4 inches. The color of the bag shall conform to number 20219, 30219, 30227, 30279, 30313, 30324 or 30450 of FED-STD-595, Colors Used in Government Procurement.
One seal shall be a minimum 1/8 inch wide, continuous, peelable seal that forms a hermetic closure. The seal shall be designed with an inverted "V" shaped peel indicator along the seal path. There shall be a minimum of 1/2 inch between the apex of the "V" and the end of the bag. The seal strength of the peelable seal shall be not less than 4 pounds per inch of width and shall be not greater than 10 pounds per inch of width. Alternative bag construction, bag materials, and material thicknesses may be used provided that the alternative method can be demonstrated to meet or exceed the requirements of this document and military abuse testing and controlled pest testing. Samples may be submitted to the contracting officer to be qualified on a case by case basis.

B. Assembly.

(1) Subassembly/accessory packet assembly. One of each applicable component as described in table II shall be inserted in a packet. If a subassembly is used, additional

components may also be inserted in the packet. For a preformed packet, contents shall be inserted in the pouch and the pouch shall be closed with a heat seal not less than 1/8 inch wide. For a form-fill-seal packet, components shall be placed in the body and the cover applied by heat sealing with a seal not less than 1/8 inch wide. The closure seal shall be free of foldover wrinkles or entrapped matter that reduces the effective seal width to less than 1/16 inch. The average seal strength of the packet seals shall be not less than 3.5 pounds per inch of width and no individual specimen shall have a seal strength of less than 3.0 pounds per inch of width. As an alternative to the seal strength requirement, the filled and sealed pouch shall exhibit no rupture or seal separation greater than 1/16 inch or seal separation that reduces the effective closure seal width to less than 1/16 inch when tested for internal pressure resistance

(2) Meal assembly. Each applicable component for each meal as described in table III shall be inserted in a meal bag. The bag shall be closed with a heat seal not less than 1/8 inch wide. The closure seal shall have an average seal strength of not less than 4 pounds per inch of width with no individual specimen test result less than 3 pounds per inch of width. The sealed meal bag shall not show any evidence of foreign odor.

D-2 LABELING

A. Subassembly/accessory packet. The subassembly/accessory packet shall be labeled on one face in permanent dark contrasting color ink with ‘A’, ‘B’ or ‘C’, as applicable. Alternatively, the packet letter may be embossed in the seal of the packet.

B. Meal bag. Each meal bag shall be correctly and legibly labeled on at least one face with permanent ink or other dark contrasting color with the information contained in accordance with Figures 1, 2 or 3, as applicable. The label shall cite the correct Menu number, name of entrée, name and address of assembler, and cite “Vegetarian” for Menus 11-14. Menus 1-4, and 13-16 shall be printed in accordance with Design 1 (Figure 1). Menus 5-8 and 17-20 shall be printed in accordance with Design 2 (Figure 2). Menus 9-12 and 21-24 shall be printed in accordance with Design 3 (Figure 3).

D-3 PACKING

A. Packing. Twelve meals shall be packed in a fiberboard box. Case “A” shall contain meals 1 through 12, and case “B” shall contain meals 13 through 24. The fiberboard box shall conform to RSC-L of ASTM D 5118/D 5118M, Standard Practice for Fabrication of Fiberboard Shipping Boxes and grade V2s of ASTM D 4727/D 4727M Standard Specification for Corrugated and Solid Fiberboard Sheet Stock (Container Grade) and Cut Shapes, except the requirements for dry burst strength shall be minimum 425 psi, the requirement for wet burst strength shall be minimum 250 psi and the laminated board

thickness shall be 0.069 inches. [US Army Research, Development and Engineering Command; Natick Soldier Research, Development, and Engineering Center found that solid fiberboard shipping container material consisting of two outer facings of 90 pound wet strength linerboard and an inner ply of 69# linerboard meets the performance criteria of this specification.] The box liner shall be a full inside width box liner fabricated from grade W5c fiberboard in accordance with ASTM D 5118/D 5118M, except the terminal ends of the liner shall overlap a minimum of 2 inches and no fastening of the overlap is required. The box shall be closed in accordance with closure method 2A1 of ASTM D 1974, Standard Practice for Methods of Closing, Sealing, and Reinforcing Fiberboard Boxes; except the gap between the outer flaps shall be not more the 3/4 inch wide. Each box shall be reinforced with two girthwise nonmetallic straps. The inside dimensions of the box shall be 16-11/16 inches in length, 9-1/8 inches in width and 10-1/4 inches in depth

D-4 UNITIZATION

A. Unit loads. Forty-eight boxes shall be arranged in unit loads in accordance with type I, class C of DLA Troop Support Form 3507, Loads, Unit: Preparation of Semiperishable Subsistence Items. Each load shall have 24 “A” cases and 24 “B” cases. At least two boxes in each tier shall be oriented to display the TTI label.

D-5 MARKING

A. Shipping containers. Shipping containers shall be marked in accordance with DLA Troop Support Form 3556, Marking Instructions for Boxes, Sacks, and Unit Loads of Perishable and Semiperishable Subsistence and as specified in the contract with the following exceptions:

(1) Identification markings normally placed on an end of the shipping container shall read from top to bottom, left to right, when the shipping container is rotated from its upright position onto its side for palletization. The major flaps of the shipping container closure immediately to the right of the marked end of the shipping container shall bear the following marking:

Contract data and other required markings
Date of pack
Lot number
Case A or B, as applicable
U.S. GOVERNMENT PROPERTY – COMMERCIAL RESALE IS UNLAWFUL
NOTE: WATER ACTIVATED Flameless Ration Heater, NSN 8970-01-321-9153, supplied in each MRE bag

Time Temperature Indicator label shall be centrally positioned on the panel. A minimum distance (quiet zone) of 1/4 inch from the nearest identification marking shall be maintained.

(2) One side panel of shipping container shall be marked “MEAL, READY-TO-EAT™, INDIVIDUAL” in letters not less than 1-1/4 inches high. Underneath the ration nomenclature, in letters not less than 1 inch, the shipping container shall be marked “DO NOT ROUGH HANDLE WHEN FROZEN (0°F or below)”.

B. Unit loads. Unit loads shall be marked in accordance with DLA Troop Support Form 3556. In addition, each unit load shall be provided with a Material Safety Data Sheet (MSDS), in accordance with MIL-R-44398. The MSDS shall be packaged and attached to one side of the unit load. A copy of the MSDS must be included with the shipping papers and a copy must also be placed in the vehicle manifest.

FIGURE 1. Example of Design 1 of Meal Bag Graphics

FIGURE 2. Example of Design 2 of Meal Bag Graphics

FIGURE 3. Example of Design 3 of Meal Bag Graphics

SECTION E INSPECTION AND ACCEPTANCE

The following quality assurance criteria, utilizing ANSI/ASQ Z1.4, Sampling Procedures and Tables for Inspection by Attributes, are required. Unless otherwise specified, single sampling plans indicated in ANSI/ASQ Z1.4 will be utilized. When required, the manufacturer shall provide the Certificate of Conformance (CoC) to the appropriate inspection activity. CoCs not provided shall be cause for rejection of the lot.

A. Definitions.

(1) Critical defect. A critical defect is a defect that judgment and experience indicate would result in hazardous or unsafe conditions for individuals using, maintaining, or depending on the item; or a defect that judgment and experience indicate is likely to prevent the performance of the major end item, i.e., the consumption of the ration.

(2) Major defect. A major defect is a defect, other than critical, that is likely to result in failure, or to reduce materially the usability of the unit of product for its intended purpose.

(3) Minor defect. A minor defect is a defect that is not likely to reduce materially the usability of the unit of product for its intended purpose, or is a departure from established standards having little bearing on the effective use or operation of the unit.

B. Conformance inspection. Conformance inspection shall include the examinations/tests and the methods of inspection cited in this section.

C. Packaging examination.

(1) Pouch material certification. The pouch material shall be tested for these characteristics. A Certificate of Conformance (CoC) may be accepted as evidence that the characteristics conform to the specified requirements.

Requirement	Requirement para	Test procedure
Thickness of meal bag	D-1,A(3)	ASTM D 2103 1/
Color of meal bag and subassembly/accessory packet	D-1,A(1) and D-1,A(3)	Visual evaluation and FED-STD-595, as applicable 2/
Water vapor transmission rate	D-1,A(1)	ASTM F 372, ASTM E 96 or Method 3030, FED-STD-101 3/

1/ ASTM D 2103 Standard Specification for Polyethylene Film and Sheeting

2/ FED-STD-595 Colors Used in Government Procurement

3/ ASTM E 96 Standard Test Methods for Water Vapor Transmission of Materials
ASTM F 372 Standard Test Method for Water Vapor Transmission Rate of Flexible Barrier Materials Using an Infrared Detection Technique
FED-STD-101 Test Procedures for Packaging Materials

(2) Subassembly/accessory packet examination. The filled and sealed packets shall be examined for the defects listed in table IV. The lot size shall be expressed in packets. The sample unit shall be one packet. The inspection level shall be S-4 and the acceptable quality level (AQL), expressed in terms of defects per hundred units, shall be 2.5 for major defects and 4.0 for minor defects.

TABLE IV. Subassembly/accessory packet defects

Category		Defect
Major	Minor	
101		Not clean. 1/
	201	Seal width less than 1/16 inch. 2/
	202	Tear nick or notch or serrations missing or does not facilitate opening.
	203	Tear or hole or open seal.
	204	Label missing or incorrect or illegible.
	205	Pouch not sealed on four sides.

1/ Outer packaging shall be free from foreign matter, which is unwholesome, has the potential to cause package damage (for example, glass, metal fillings, etc.), or generally detracts from the clean appearance of the package. The following examples shall not be scored as defects for unclean:

a. Foreign matter which presents no health hazard or potential package damage and which can be readily removed by gently shaking the package or by gently brushing the package with a clean dry cloth.

b. Localized dried product which affects less than 1/8 of the total surface area of one pouch face, or an aggregate of scattered dried product which affects less than 1/4 of the total surface area of one pouch face.

2/ An effective seal is defined as any uncontaminated, fusion bonded, continuous path, minimum 1/16 inch wide, producing a hermetically sealed pouch.

(3) Subassembly/accessory packet contents examination. The filled and sealed packets shall be examined for the defects listed in table V (this examination may be performed on the preformed packets after filling and prior to sealing). The lot size shall be expressed in packets. The sample unit shall be one packet, open or sealed. The inspection level shall be S-4 and the AQL, expressed in terms of defects per hundred units, shall be 1.5 for major defects and 4.0 for minor defects.

TABLE V. Subassembly/accessory packet contents defects

Category		Defect
Major	Minor	
101		Component not clean. 1/
	201	Missing or unserviceable component.
	202	Plastic shrink film missing from around screw cap of hot sauce bottle or hot sauce bottle leaking, as applicable.

1/ Outer packaging shall be free from foreign matter, which is unwholesome, has the potential to cause package damage (for example, glass, metal filings, etc.), or generally detracts from the clean appearance of the package. The following examples shall not be scored as defects for unclean:

a. Foreign matter which presents no health hazard or potential package damage and which can be readily removed by gently shaking the package or by gently brushing the package with a clean dry cloth.

b. Localized dried product which affects less than 1/8 of the total surface area of one package face, or an aggregate of scattered dried product which affects less than 1/4 of the total surface area of one package face.

(4) Assembled meal bag examination. The filled and sealed meal bags shall be inspected for the defects listed in table VI. The lot size shall be expressed in bags. The sample unit shall be one bag. The inspection level shall be S-4 and the AQL, expressed in terms of defects per hundred units, shall be 2.5 for major defects and 4.0 for minor defects. A minimum of 50 samples shall be examined for critical defects. The finding of any critical defect shall be cause for rejection of the lot. The inspection sample shall contain a proportionate amount of each of the meals.

TABLE VI. Assembled meal bag defects

Category			Defect
Critical	Major	Minor	
1			Tear or hole or puncture through carton or open carton causing a hole in the pouch or obviously wet or stained carton due to leaking pouch. 1/
2			Tear or hole or open seal in cheese spread.
3			Swollen cheese spread pouch, or swollen pouch or carton of thermostabilized item.
4			Tear or hole or puncture in uncartoned thermostabilized pouch.
	101		Tear or hole in carton exposing pouch to potential damage.
	102		Menu component missing or incorrect assortment for menu. 2/
	103		Meal bag not clean or outer packaging of its contents not clean. 3/
	104		Foreign odor.
	105		Labeling missing or incorrect or illegible.
	106		Swollen peanut butter or jelly or jam pouch.

TABLE VI. Assembled meal bag defects - Continued

Category			Defect
Critical	Major	Minor	
	107		Tear or hole or open seal in component packages.
	108		Crushed or broken component. 4/
	109		Broken spoon.
	110		Chocolate toffee rolls or cubes not packaged in barrier pouch.
		201	Tear or hole or open seal or split in meal bag.
		202	Tear or hole or open seal in subassembly/accessory packet.
		203	Thermostabilized carton flaps open or tear or hole in carton not exposing pouch to potential damage.
		204	Inverted "V" shaped peel indicator missing or not located as specified.
		205	Plastic shrink film missing from around screw cap of hot sauce bottle or hot sauce bottle leaking, as applicable.
		206	Labeling graphics of meal bag not correct.

1/ Applies to cartoned items.

2/ A missing entrée shall be cause for rejection of the lot.

3/ Outer packaging shall be free from foreign matter, which is unwholesome, has the potential to cause package damage (i.e. glass, metal filings, etc.), or generally detracts from the clean appearance of the package. The following examples shall not be scored as defects for unclean:

a. Foreign matter which presents no health hazard or potential package damage and which can be readily removed by gently shaking the package or by gently brushing the package with a clean dry cloth.

b. Localized dried product which affects less than 1/8 of the total surface area of one pouch face, or an aggregate of scattered dried product which affects less than 1/4 of the total surface area of one pouch face.

4/ For definition of crushed or broken, refer to applicable ration component document.

D. Methods of inspection.

(1) Seal testing. The pouch seals shall be tested for seal strength or internal pressure resistance as required in a, b, c, or d, as applicable.

a. Unfilled preformed subassembly/accessory packet pouch. The seals of the unfilled preformed pouches for the subassembly/accessory packet shall be tested for seal strength in accordance with ASTM F 88, Seal Strength of Flexible Barrier Materials. The lot size shall be expressed in pouches. The sample unit shall be one pouch. The inspection shall be level S-1 and the AQL, expressed in defects per hundred units, shall be 10.0. Three specimens shall be cut from each of the three sealed sides of each pouch in the sample. The average seal strength of any side shall be calculated by averaging the results of the three specimens cut from that side. Any test specimen failing to meet a seal strength of 3 pounds per inch of width shall be scored as a major defect. Any average seal strength of less than 3.5 pounds per inch of width shall be cause for rejection of the lot. Alternatively, the internal pressure resistance shall be determined by pressurizing the pouches while they are restrained between two rigid plates. The sample size shall be the number of pouches indicated by inspection level S-1. If a three seal tester (one that pressurizes the pouch through an open end) is used, the closure seal shall be cut off for testing the side and bottom seals of the pouch. For testing the closure seal, the bottom seal shall be cut off. The pouches shall be emptied prior to testing. If a four-seal tester (designed to pressurize filled pouches by use of a hypodermic needle through the pouch wall) is used, all four seals can be tested simultaneously. The distance between rigid restraining plates on the four-seal tester shall be equal to the thickness of the product +1/16 inch. Pressure shall be applied at the approximate uniform rate of 1 pound per square inch gage (psig) per second until 14 psig pressure is reached. The 14 psig pressure shall be held constant for 30 seconds and then released. The pouches shall then be examined for separation or yield of the heat seals. Any rupture of the pouch or evidence of seal separation greater than 1/16 inch in the pouch manufacturer's seal shall be considered a test failure. Any seal separation that reduces the effective closure seal width to less than 1/16 inch (see table IV, footnote 2/) shall be considered a test failure. Any test failure shall be a major defect and shall be cause for rejection of the lot.

b. Unfilled meal bag. The seals of the unfilled meal bags shall be tested for seal strength in accordance with ASTM F 88. The lot size shall be expressed in bags. The sample unit shall be one bag. The sample size shall be the number of bags indicated by inspection level S-1. Three specimens shall be cut from the sealed end of each bag in the sample. Samples shall not be taken from the inverted "V" peel initiation. Any specimen with a seal strength less than 4 pounds per inch of width or greater than 10 pounds per inch of width shall be a major defect and shall be cause for rejection of the lot.

c. Subassembly/accessory packet pouch closure. The closure seals of the pouches for the subassembly/accessory packet shall be tested for seal strength in accordance with ASTM F 88. The lot size shall be expressed in pouches. The sample unit shall be one pouch. The inspection level shall be S-1 and the AQL, expressed in defects per hundred units, shall be 10.0. For the closure seal on preformed pouches, three adjacent specimens shall be cut from the closure seal of each pouch in the sample. For the form-fill-seal pouches, three specimens shall be cut from each side and each end of each pouch in the sample. The average seal strength of any side, end or closure shall be calculated by averaging the three specimens cut from that side, end or closure. Any test specimen failing to meet a seal strength of 3 pounds per inch of width shall be scored as a major defect. Any average seal strength of less than 3.5 pounds per inch of width shall be cause for rejection of the lot. Alternatively, the internal pressure resistance shall be determined by pressurizing the pouches while they are restrained between two rigid plates. The sample size shall be the number of pouches indicated by inspection level S-1. If a three seal tester (one that pressurizes the pouch through an open end) is used, the closure seal shall be cut off for testing the side and bottom seals of the pouch. For testing the closure seal, the bottom seal shall be cut off. The pouches shall be emptied prior to testing. If a four-seal tester (designed to pressurize filled pouches by use of a hypodermic needle through the pouch wall) is used, all four seals can be tested simultaneously. The distance between rigid restraining plates on the four-seal tester shall be equal to the thickness of the product +1/16 inch. Pressure shall be applied at the approximate uniform rate of 1 pound per square inch gage (psig) per second until 14 psig pressure is reached. The 14 psig pressure shall be held constant for 30 seconds and then released. The pouches shall then be examined for separation or yield of the heat seals. Any rupture of the pouch or evidence of seal separation greater than 1/16 inch in the pouch manufacturer's seal shall be considered a test failure. Any seal separation that reduces the effective closure seal width to less than 1/16 inch (see table IV, footnote 2/) shall be considered a test failure. Any test failure shall be a major defect and shall be cause for rejection of the lot.

d. Meal bag closure. The closure seals of the meal bags shall be tested for seal strength in accordance with ASTM F 88. The lot size shall be expressed in bags. The sample unit shall be one bag. The sample size shall be the number of bags indicated by inspection level S-1. Three specimens shall be cut from the closure seal of each bag in the sample. The average seal strength shall be calculated by averaging the three test specimens cut from that seal (the sample unit). Any test specimen result less than 3 pounds per inch of width shall be cause for rejection of the lot. Any average seal strength of less than 4 pounds per inch of width shall be cause for rejection of the lot.

(2) Unfilled meal bag and unfilled preformed subassembly/accessory packet pouch seal certification. A CoC may be accepted as evidence that unfilled bags or pouches conform to the seal strength requirements specified in D-1,A,(1) and (3). When deemed necessary by the government inspector, testing of the unfilled preformed pouches for seal strength shall be as specified in E,D(1)a.

E. Packing.

(1) Shipping container and marking examination. The filled and sealed shipping containers shall be examined for the defects listed in table VII. The lot size shall be expressed in shipping containers. The sample unit shall be one shipping container fully packed. The inspection level shall be S-3 and the AQL, expressed in terms of defects per hundred units, shall be 4.0 for major defects and 10.0 for total defects.

TABLE VII. Shipping container and marking defects

Category		Defect
Major	Minor	
101		Marking missing or incorrect or illegible.
102		Outer flaps do not completely meet, leaving an opening greater than 3/4 inch between flap ends.
103		Inadequate workmanship. 1/
104		Missing meal. 2/
105		Not one of each menu specified.
	201	Time-temperature indicator missing or not centrally located on panel.
	202	Time-temperature indicator 1/4-inch quiet zone not maintained.
	203	Meal bag graphics do not coincide with specified design.

1/ Inadequate workmanship is defined as, but not limited to, incomplete closure of container flaps, loose strapping, inadequate stapling, improper taping, or bulged or distorted container.

2/ Each missing meal is a defect.

(2) Flap closure testing. The lot size shall be expressed in shipping containers. The sample unit shall be one shipping container. The inspection level shall be S-2 and the AQL, expressed in terms of defects per hundred units, shall be 4.0. The closure of the four outer flaps of the container shall be tested separately. A 90 degree angular bar with each leg approximately 5 inches long by 3 inches wide by 1/8 inch thick shall be used to test the flap closures. Insert one leg of the angular bar full length under the center of one outer flap. Insertion shall be made through the open slot between the outer flaps. Lift the container vertically by the other leg of the bar until the container is suspended. The complete upper surface of the inserted leg shall be in contact with the inner surface of the flap during the lifting and suspension of the container. Complete separation of the adhesive bond of one or more of the outer flaps, showing no evidence of fiber tear, shall be scored as a major defect.

F. Unit load examination. The unit load shall be examined in accordance with the requirements of DLA Troop Support Form 3507. Any nonconformance shall be classified as a major defect.

SECTION J REFERENCE DOCUMENTS

Unless otherwise specified, the issues of these documents are those active on the date of the solicitation or contract.

DLA Troop Support Forms

Form 3507	Loads, Unit: Preparation of Semiperishable Subsistence Items
Form 3556	Marking Instructions for Boxes, Sacks, and Unit Loads of Perishable and Semiperishable Subsistence

MILITARY SPECIFICATIONS

MIL-PRF-32176	Bag, Hot Beverage
MIL-R-44398B	Ration Supplement, Flameless Ration Heater (FRH)

FEDERAL STANDARDS

FED-STD-101	Test Procedures for Packaging Materials
FED-STD-595	Colors Used in Government Procurement

NON-GOVERNMENTAL STANDARDS

AMERICAN SOCIETY FOR QUALITY (ASQ) www.asq.org

ANSI/ASQ Z1.4	Sampling Procedures and Tables for Inspection by Attributes

ASTM INTERNATIONAL www.astm.org

D 1974	Standard Practice for Methods of Closing, Sealing, and Reinforcing Fiberboard Boxes
D 2103	Standard Specification for Polyethylene Film and Sheeting

D 4727/D 4727M	Standard Specification for Corrugated and Solid Fiberboard Sheet Stock (Container Grade) and Cut Shape
D 5118/D 5118M	Standard Practice for Fabrication of Fiberboard Shipping Boxes
E 96/E 96M	Standard Test Methods for Water Vapor Transmission of Materials
F 88	Standard Test Method for Seal Strength of Flexible Barrier Materials
F 1249	Standard Test Method for Water Vapor Transmission Rate Through Plastic Film and Sheeting Using a Modulated Infrared Sensor

For DLA Troop Support Website Posting

RDNS-CFF 9 February 2011

TO: DLA Troop Support- Subsistence DSCP-FTRA

SUBJECT: ES11-051; Document Change, Elimination of Hot Beverage Bags from Some Menus of ACR-M-032, Meal, Ready-to-Eat™ (MRE™), Assembly Requirements

1. The Joint Service Operational Ration Forum (JSORF) determined that the Hot Beverage Bag could be eliminated from a total of eight menus leading to reduced costs and optimal components in each menu. (Note that the Hot Beverage Bag is already not included in Menu 21)

2. The following changes to ACR-M-032 are recommended for current, pending and future contracts, until the document is formally revised:

Section C-2,C, Table III, menus 2, 7, 9, 11, 13, 16 and 24. Delete “Hot Beverage Bag”.

3. Attached is Change 02 to ACR-M-032, Meal, Ready-to-Eat™ (MRE™), Assembly Requirements, dated 9 February 2011, with changes highlighted.

INCH-POUND

MIL-PRF-44073G
11 September 2009
SUPERSEDING
MIL-PRF-44073F
4 September 2001
W/ Change 03 23 March 2011

PERFORMANCE SPECIFICATION

PACKAGING OF FOOD IN FLEXIBLE POUCHES

This specification is approved for use by all Departments and Agencies of the Department of Defense.

1. SCOPE

1.1 Scope. This specification covers the performance criteria for packaging materials and the packaging of food in flexible pouches to include the filling and hermetic sealing of the pouches and, when applicable, the packaging of the pouches into cartons.

1.2 Classification. Pouches are of the following types, styles and designs, as specified (see 6.2).

1.2.1 Types.

Type I – Single Serving Pouch (SSP)

Type II – Institutional Size Pouch (ISP)

Comments, suggestions, or questions on this document should be addressed to US Army Research, Development and Engineering Command, Natick Soldier Research, Development and Engineering Center, RDNS-CFF, 15 Kansas St., Natick, MA 01760-5018 or emailed to ray.valvano@us.army.mil. Since contact information can change, you may want to verify the currency of this address information using the ASSIST Online database at http://assist.daps.dla.mil/.

AMSC N/A FSC 89GP

DISTRIBUTION STATEMENT A. Approved for public release; distribution is unlimited.

1.2.2 Styles.

Style 1 – Rectangular pouch

Style 2 – Shaped pouch with side spout (figure 4)

Style 3 – Shaped pouch with center spout (figure 5)

1.2.3 Designs.

Design A – Horizontal directional tear

2. APPLICABLE DOCUMENTS

2.1 General. The documents listed in this section are specified in sections 3, 4 or 5 of this specification. This section does not include documents cited in other sections of this specification or recommended for additional information or as examples. While every effort has been made to ensure the completeness of this list, document users are cautioned that they must meet all specified requirements of documents cited in sections 3, 4 or 5 of this specification, whether or not they are listed.

2.2 Government documents.

2.2.1 Specifications, standards, and handbooks. None.

2.2.2 Other government documents, drawings and publications. The following other Government documents, drawings, and publications form a part of this document to the extent specified herein. Unless otherwise specified, the issues of these documents are those cited in the solicitation or contract.

U.S. DEPARTMENT OF HEALTH AND HUMAN SERVICES

Federal Food, Drug and Cosmetic Act and regulations (21 Code of Federal Regulations (CFR), Parts 170-199)

(Copies of this document are available from www.access.gpo.gov/nara or Superintendent of Documents, ATTN: New Orders, P.O. Box 371954, Pittsburgh, PA 15250-7954.)

2.3 Non-Government publications. The following documents, drawings, and publications form a part of this document to the extent specified herein. Unless otherwise specified, the issues of these documents are those cited in the solicitation or contract.

AMERICAN SOCIETY FOR TESTING AND MATERIALS (ASTM)

D 999 – Methods for Vibration Testing of Shipping Containers

D 1974 – Standard Practice for Methods of Closing, Sealing, and Reinforcing Fiberboard Boxes

D 3985 – Oxygen Gas Transmission Rate Through Plastic Film and Sheeting Using a Coulometric Sensor

D 4727/D 4727M – Standard Specification for Corrugated and Solid Fiberboard Sheet Stock (Container Grade) and Cut Shapes

D 5118/D 5118M – Standard Practice for Fabrication of Fiberboard Shipping Boxes

D 5276 – Test Method for Drop Test of Loaded Containers by Free Fall

F 372 – Standard Test Method for Water Vapor Transmission of Flexible Barrier Materials Using an Infrared Detection Technique

(Copies of these documents are available at www.astm.org or from ASTM International, 100 Barr Harbor Drive, PO Box C700, West Conshohocken, PA 19428-2959)

2.4 Order of precedence. In the event of a conflict between the text of this document and the references cited herein, the text of this document takes precedence. Nothing in this document, however, supersedes applicable laws and regulations unless a specific exemption has been obtained.

3. REQUIREMENTS

3.1 Performance characteristics.

3.1.1 Pouch material. The pouch material shall be capable of being fabricated into pouches. The material used for the pouch shall be generally recognized as safe (GRAS) for use with food in accordance with 21 CFR, Parts 170-199 or other standards and regulations. Recycled, recovered, or environmentally preferable materials should be used to the maximum extent possible, provided that the material meets or exceed the operational and maintenance requirement, and promotes economically advantageous life cycle costs.

3.1.1.1 Oxygen transmission rate. The oxygen transmission rate (O_2TR) of the material

shall not exceed 0.06 cc/m^2/24 hrs/atm.

3.1.1.2 Water vapor transmission rate. The water vapor transmission Rate (WVTR) of the material shall not exceed 0.01 gm/m^2/24 hrs.

3.1.1.3 Thermal processing. The pouches shall be capable of withstanding the process specified in the applicable food document. If the material used is a multi-layered laminate, it shall show no evidence of delamination after thermal processing.

3.1.2 Pouch configurations and dimensions. Pouch configurations and dimensions for 5 and 8 ounce Single Serving Pouch (SSP) pouches shall be as specified in figures 1, 1A, 2A, 4, 5 or 6, as applicable (see 6.2). Pouch configuration and dimensions for the Institutional Size Pouch (ISP) shall be as specified in figure 3 (see 6.2). Commercial pouches [packaging material, construction, and graphics (colors, design and labeling)] shall be submitted to the Contracting Officer for review and approval and to US Army Research, Development and Engineering Command, Natick Soldier Research, Development and Engineering Center, RDNS-CFF for review and recommendation.

3.1.2.1 Directional tear. ~~The~~ As applicable, the pouch material shall be modified (in one or more layers) to provide a straight tear along the lengthwise axis of the pouch.

Comment [C1]: Natick case ES11-052, change 03, 23 Mar 11, to cite seal parameters.

3.1.3 Pouch filling.

3.1.3.1 Eight ounce pouch. Products requiring an average net weight of 8 ounces or less but more than 5 ounces shall be filled into an 8 ounce size pouch. Placeable products may be filled into an 8 ounce pouch.

3.1.3.2 Five ounce pouch. Products requiring an average net weight of 5 ounces or less shall be filled into a 5 ounce size pouch.

3.1.3.3 Institutional size pouch. Products requiring an average net weight ranging from 48 to 104 ounces shall be filled into an ISP.

3.1.4 Filled, sealed and thermoprocessed pouch.

~~3.1.4.1 Closure seal. The closure seal width shall be a minimum 2.5 mm. The closure seal shall be free of impression or design on the seal surface that would conceal or impair visual detection of seal defects. The closure seal shall be free of wrinkles, occluded matter, or evidence of entrapped moisture or grease that reduces the closure seal width to less than 1/16 inch at any location along its continuous path.~~

3.1.4.1 Closure seal. The closure seal width shall be a minimum 1/8 inch for conventional

heat seals or a minimum 1.0 mm for ultrasonic seals. The closure seal shall be free of impression or design on the seal surface that would conceal or impair visual detection of seal defects. The closure seal shall be free of wrinkles, occluded matter, or evidence of entrapped moisture or grease that reduces the closure seal width to less than 1/16 inch at any location along its continuous path for conventional heat seals or reduces the closure seal width to less than 1.0 mm for ultrasonic seals.

Comment [C2]: Natick case ES11-052, change 03, 23 Mar 11, to cite seal parameters.

3.1.4.2 Residual gas volume. Residual gas volume in filled and sealed SSP pouches shall not exceed 20 cubic centimeters (cc), except pouches with five ounces of fruit shall not exceed 10 cc. Residual gas volume in the filled and sealed ISPs shall not exceed 250 cc.

3.1.4.3 Internal pressure. The pouches shall be filled and hermetically sealed such that after thermal processing, the pouches shall withstand the applicable pressure for 30 seconds.

3.1.4.4 Camouflage. The color of outside surfaces of the SSP pouch, after thermal processing, shall contribute to field camouflage. For ISP, commercial pouches are acceptable.

3.1.4.5 Pouch defects. Filled, sealed and thermally processed pouches shall be free of damage (such as, but not limited to, tears, cuts, holes, or if a multi-layer laminate is used, abrasions through one or more layers in the pouch material, or leakage through any seal).

3.2 Environmental conditions.

3.2.1 Low temperature (Type I). After thermal processing, the filled and sealed SSP pouch shall withstand pouch abuse at 28°F with a survival rate of 75 percent.

3.2.2 High temperature (Type I). After thermal processing, the filled and sealed SSP pouch shall withstand pouch abuse at 160°F with a survival rate of 100 percent.

3.2.3 Standard temperature (Type II). After thermal processing, the filled and sealed ISP shall withstand pouch abuse at 72°F with a survival rate of 100 percent.

3.2.4 Frozen temperature (Type II). After thermal processing, the filled and sealed ISP shall withstand pouch abuse at -20°F with a survival rate of 75 percent.

3.3 Carton design. Cartons, when specified in the applicable food product document, shall meet the following criteria.

3.3.1 Carton design for 8 ounce size pouches (Type I). The SSP carton, when closed and sealed, shall completely enclose the pouch to prevent physical damage and entry of foreign

matter.

3.3.2 Carton design for 5 ounce size pouches (Type I, Style 1). The SSP carton, when closed and sealed, shall completely enclose pouch to prevent physical damage and entry of foreign matter. Not applicable for Type I, Styles 2 or 3 pouches.

3.3.3 Carton color. The color of all carton surfaces shall be natural kraft, tan or dull gray.

3.3.4 Carton dimensions (Type I). The inside length and width dimensions of the SSP carton shall be equal to the outside length and width dimensions of the pouch. The carton depth shall be 5/8 inch (± 1/16 inch).

3.3.5 Carton design (Type II). The ISP carton, when closed and sealed, shall enclose pouch to prevent physical damage. The carton may have open or closed ends.

3.3.6 Carton dimensions (Type II). The outside length, width and height of the ISP carton shall not exceed 12-13/16 by 10-3/4 by 2-1/8 inches.

3.4 Packaging of pouches in cartons.

3.4.1 Pouch in carton (Type I). Each SSP carton shall contain one flat, fully extended pouch.

3.4.2 Carton closure (Type I). Each SSP carton shall be securely closed. The closure shall have a bond strength greater than the fiber tear of the paperboard.

3.4.3 Pouch in carton (Type II). Each ISP carton shall contain one pouch. One end of ISP may be folded to accommodate fitting the pouch into the carton.

3.4.4 Carton closure (Type II). The top and bottom faces of the carton shall be compressed and the ends taped. The closure shall have a bond strength greater than the fiber tear of the fiberboard.

3.5 Carton label (Type II). The following instructions shall be correctly and legibly labeled on the ISP carton. Type size of the label shall be no smaller than shown below (printed on 8-1/2 by 11 inch paper), but can be larger.

ATTENTION!

PROTECTIVE CARTON-DO NOT THROW AWAY

SAVE AND RE-USE TO PROTECT
POUCH FROM DAMAGE

To Avoid Damaging Pouch:

1. Keep Pouch in Carton Until Ready to Heat, Then Remove.

2. Insert Pouch Back Into Carton After Heating.

3. Always Use Cartons When Transporting
Pouches in Insulated Food Containers.

4. If Cartons Are Unavailable, Stack Pouches
With Fiberboard Pads Between Pouches.

In addition, the product name shall be correctly and legibly labeled on the carton.

4. VERIFICATION

4.1 Conformance inspection. Conformance inspection shall include the examinations and tests in this section, as defined in the contract, performed on specified samples (see 6.2).

4.2 Performance characteristics testing. The pouch material, pouch and carton shall be tested for the performance characteristics listed in table I.

TABLE I. Verification methods.

Characteristic 1/	Requirement	Verification
Oxygen transmission rate	3.1.1.1	4.5.1
Water vapor transmission rate	3.1.1.2	4.5.2
Thermal processing	3.1.1.3	4.5.3
Pouch configurations and dimensions	3.1.2	Figures
Directional tear	3.1.2.1	4.5.4
Residual gas volume	3.1.4.2	4.5.5
Internal pressure	3.1.4.3	4.5.6
Camouflage (Type I), as applicable	3.1.4.4	4.5.7
Low temperature (Type I)	3.2.1	4.5.8.1
High temperature (Type I)	3.2.2	4.5.8.2
Standard temperature (Type II)	3.2.3	4.5.8.3
Frozen temperature (Type II)	3.2.4	4.5.8.4

1/ Compliance to the requirements for O_2TR, WVTR, pouch configurations and dimensions, thermal processing, environmental conditions and camouflage may be verified by Certificate of Conformance (CoC).

4.3 Examination of pouch. After thermal processing, the pouches shall be visually examined for compliance. Defects and defect classifications are listed in table II.

TABLE II. Filled, sealed and thermally processed pouch defects.

Category				Defect
Critical	Major A	Major B	Minor	
1				Swollen pouch.
2				Tear, cut, hole, or if a multi-layered laminate is used, abrasion through one or more layers in the pouch material or leakage through any seal.
3				Foldover wrinkle extending into the seal such that the closure seal is reduced to less than 1/16 inch for heat seals or less than 1.0 mm for ultrasonic seals. 4/
4				Presence of entrapped matter (for example, product, moisture, grease, etc.) that reduces the closure seal to less than 1/16 inch for heat seals or less than 1.0 mm for ultrasonic seals. 4/
5				Presence of delamination when a multi-layered laminate is used. 1/
6				Closure seal less than 1/16 inch for heat seals or less than 1.0 mm for ultrasonic seals at any location along its continuous path. 4/
	101			Unclean pouch. 2/
	102			Any impression or design on the seal surfaces which conceals or impairs visual detection of sea defects. 3/
	103			~~Less than 3/16 inch between inside edge of tear notch and inside edge of seal.~~ Minimum heat seal width not as specified in

Comment [C3]: Natick case ES11-052, change 03, 23 Mar 11, to cite seal parameters.

Comment [C4]: Natick case ES11-052, change 03, 23 Mar 11, to cite seal parameters.

Comment [C5]: Natick case ES11-052, change 03, 23 Mar 11, to cite seal parameters.

				applicable figures.
	104			Closure seal not located as specified.

Comment [C6]: Natick case ES11-052, change 03, 23 Mar 11, to cite seal parameters.

TABLE II. Filled, sealed and thermal processed pouch defects (continued)

Category				Defect
Critical	Major A	Major B	Minor	
	105			Labeling missing or incorrect or illegible.
		151		Presence of delamination when a multi-layered laminate is used. 1/
		152		~~Closure seal width less than 2.5 mm but greater than 1/16 inch.~~ For heat seals, closure seal width less than 1/8 inch but greater than or equal to 1/16 inch.
			201	Presence of delamination when a multi-layered laminate is used. 1/
			202	Tear notches missing or not as specified.
			203	Tear notches not located as specified.
			204	Depth of tear notches not as specified.
			205	Color of SSP does not contribute to field camouflage, when applicable.
			206	Foreign odor.

Comment [C7]: Natick case ES11-052, change 03 23 Mar 11, to cite seal parameters.

1/ Delamination defect classification:

Critical - Evidence of outer ply delamination such that the adjacent ply in the pouch body is exposed or evidence of two ply delamination such that the food contact layer is exposed.

Major B - Delamination of the outer ply in the pouch seal area that can be propagated to expose the adjacent ply at the food product edge of the pouch after manual flexing of the delaminated area. To flex, the delaminated area shall be held between the thumb and forefinger of each hand with both thumbs and forefingers touching each other. The delaminated area shall

then be rapidly flexed 10 times by rotating both hands in alternating clockwise-counter clockwise directions. Care shall be exercised when flexing delaminated areas near the tear notches to avoid tearing the pouch material. After flexing, the separated outer ply shall be grasped between thumb and forefinger and gently lifted toward the food product edge of the seal or if the separated area is too small to be held between thumb and forefinger, a number two stylus shall be inserted into the delaminated area and a gentle lifting force applied against the outer ply. If separation of the outer

ply can be made to extend to the product edge of the seal with no discernible resistance to the gentle lifting, the delamination shall be scored as a Major B defect. Additionally, spot delamination of the outer ply in the body of the pouch that is able to be propagated beyond its initial borders is also a Major B defect. To determine if the delaminated area is a defect, use the following procedure: Mark the outside edges of the delaminated area using a bold permanent marking open. Open the pouch and remove the contents. Cut the pouch transversely not closer than 1/4 inch (plus or minus 1/16 inch) from the delaminated area. The pouch shall be flexed in the area in question using the procedure described above. Any propagation of the delaminated area, as evidenced by the delaminated area exceeding the limits of the outlined borders, shall be scored as a Major B defect.

Minor - Minor delamination of the outer ply in the pouch seal area is acceptable and shall not be classified as a minor defect unless it extends to within 1/16 inch of the food product edge of the seal. All other minor outer ply delamination in the pouch seal area or isolated spots of delamination in the body of the pouch that do not propagate when flexed as described above shall be classified as minor.

2/ Scale or dust on the outside of pouches caused by retort water may be removed by washing. The following examples shall not be scored as defects for unclean:

a. Water spots.

b. On SSP, two or less specks of dried product each of which measure 1/8 inch by 1/8 inch or equivalent area, or less. On ISP, ten or less specks of dried product each of which measure 1/8 inch by 1/8 inch or equivalent area, or less.

c. Any foreign matter which presents no health hazard or no potential pouch damage and which readily falls off when pouch is lifted and shaken lightly.

d. Very thin film of grease, oil, or product residue which is discernible to touch, but not readily discernible by visual examinations.

e. Thin strips or drops of adhesive.

3/ If doubt exists as to whether or not the sealing equipment leaves an impression or design on

the seal surfaces that could conceal or impair visual detection of seal defects, samples shall be furnished to the contracting officer for a determination as to acceptability.

4/ An internal pressure test may be used to verify pouch integrity for ultrasonically sealed pouches that are difficult to measure or quantify during visual inspection.

Comment [C8]: Natick case ES11-052, change 03, 23 Mar 11, to cite seal parameters.

4.4 Examination of pouch and carton. When applicable, the pouch and carton assembly shall be examined for compliance. Defects and defect classifications are listed in table III.

TABLE III. Pouch and carton assembly defects

.

Category			Defect
Critical	Major	Minor	
1			Tear, hole, or puncture through carton or open carton causing a hole in the pouch or obviously wet or stained carton due to leaking pouch.
	101		Tear or hole in carton exposing pouch to potential damage.
	102		Outer flaps of carton not closed.
	103		Carton not clean.
	104		SSP pouch body not in a flat, fully extended position in SSP carton.
	105		Bond strength in SSP carton closure is not greater than fiber strength of paperboard of carton.
	106		ISP pouch does not fit into the ISP carton. 1/
		201	Tear or hole in carton not exposing pouch to potential damage.
		202	Color of carton not as specified.
		203	Labeling missing or incorrect or illegible.
		204	Outer flaps of SSP carton not closed to within 1/2 inch of either end.

205	The ISP carton not closed as specified.
206	Foreign odor.

1/ Pouches with a folded end shall not be scored as a defect.

4.5 Tests.

4.5.1 Oxygen transmission rate. The oxygen transmission rate of the material shall be determined in accordance with ASTM D 3985, at 73°F and 50 % RH. Any oxygen transmission rate exceeding 0.06 cc/m^2/24 hrs/atm shall be considered a test failure and shall be cause for rejection of the lot.

4.5.2 Water vapor transmission rate. The water vapor transmission rate of the material shall be determined in accordance with ASTM F 372, at 100°F and 90 % RH. Any water vapor transmission rate exceeding 0.01 gm/m^2/24 hrs shall be considered a test failure and shall be cause for rejection of the lot.

4.5.3 Thermal processing. Testing for thermal processing of the pouches shall be as follows: Pouches shall be filled with five, eight, or 48 to 104 ounces of water, as applicable to the pouch size, sealed and exposed to the same thermal processing conditions as required for filled and sealed pouches by the food product document. Following thermal processing, pouches shall be examined visually. Any pouch material defect as a result of thermal processing shall be considered a test failure and shall be cause for rejection of the lot.

4.5.4 Directional tear test. The product in the pouch shall be pressed away from the intended tear path. The side panels of the pouch shall be pressed together along the intended tear path. The pouch shall be oriented with the long edge of the pouch on the horizontal, parallel to the floor. The long edge of the pouch (opposite the notched long edge) shall be supported on a horizontal surface, such as a table top. A pouch stand or apparatus to hold the pouch upright and stationary during the test may be used. Using thumb and forefinger of each hand the pouch shall be gripped on each side of the tear notch opening at one end of the pouch. Twisting the two sides of the tear notch away from the notch center the pouch shall be torn straight across and open along the axis of the adjacent lengthwise side seal while maintaining the horizontal orientation of the pouch on the supported surface, (if pouch opening cannot be initiated on the initial attempt, the test shall be performed using the notch at the opposite end of the pouch). If the path of the resultant pouch tear line reduces the width of the remaining opened pouch to less than 3-1/2 inches when measured from the outside edge of the opposite side seal to the lowest point along the tear line, it shall be considered a test failure and cause for rejection of the lot.

4.5.5 Residual gas volume test. The samples for test shall be opened under 75°F ± 5°F water and the gases shall be collected by water displacement in a graduated cylinder or other

calibrated tube. The volume of the gases shall be reported to the nearest 0.1 cubic centimeter (cc) for SSP. Any residual gas volume exceeding 20 cc in SSP shall be considered a test failure, except any residual gas volume exceeding 10 cc in SSP pouches filled with fruit shall be considered a test failure. The volume of the gases shall be reported to the nearest 1 cc for ISP. Any residual gas volume exceeding 250 cc in ISP pouches shall be considered a test failure and shall be cause for rejection of the lot.

4.5.6 Internal pressure test. Internal pressure resistance shall be determined by pressurizing the pouches while they are restrained between two rigid plates. The plates shall be 1/2 inch ± 1/16 inch apart or 1 inch ± 1/16 inch apart for SSP, or 2 inches ± 1/16 inch apart for ISP. If a three-seal tester (one that pressurizes the pouch through an open end) is used, the closure seal shall be cut off for testing the side and bottom seals of the pouch; for testing of the closure seal, the bottom seal shall be cut off. The pouches shall be emptied prior to testing. If a four-seal tester (designed to pressurize filled pouches by use of a hypodermic needle through the pouch wall) is used, all four seals can be tested simultaneously. For SSP, the pressure shall be 20 psig for the 1/2 inch plate distance and 12 psig for the 1 inch plate distance. For ISP, the pressure shall be 10 psig for the 2 inch plate distance. Pressure shall be applied gradually until pressure set point is reached. The pressure set point shall be held constant for 30 seconds and then released. The pouches shall then be examined for separation or yield of the seals. Any rupture of the pouch or evidence of seal separation greater than 1/16 inch in the pouch manufacturer's seal shall be considered a test failure. Any seal separation that reduces the effective closure seal width to less than 1/16 inch for heat seals or less than 1.0 mm for ultrasonic seals (see table II) shall be considered a test failure and shall be cause for rejection of the lot.

Comment [C9]: Natick case ES11-052, change 03, 23 Mar 11, to cite seal parameters.

4.5.7 Camouflage (Type I). External visible color of the outside surfaces of the SSP pouch material after thermal processing shall conform to the range of the government approved and standardized color swatches. Standardized swatch samples have been provided to and are on file with each contractor, each material supplier, USDA, Natick, and DSCP. Visibly match the outside surface of the pouch material to the range of colors of the standardized color swatch samples. Failures shall be classified as minor defects.

4.5.8 Environmental conditions.

4.5.8.1 Low temperature (Type I). Fill the SSP pouches with water, seal and thermal process. After thermal processing, place pouches in paperboard cartons. Condition the unit packs in an atmosphere uniformly maintained at 28°F ± 2°F for a period of 48 hours. During exposure, position the unit packs to allow free circulation of air around each pack. Conduct a pouch abuse test while still in the frozen state using the test apparatus shown in figure 2. For eight ounce unit packs, the drop height shall be 40 inches; for five ounce unit packs, the drop height shall be 64 inches. Drop each unit pack twice, once on each end. Recondition tested unit packs to ambient temperature for at least 24 hours, remove pouches from cartons and examine visually. Any pouch leakage shall be considered a test failure and shall be cause for rejection of the lot.

4.5.8.2 High temperature (Type I). Fill the SSP pouches with water, seal and thermal process. After thermal processing, package pouches in paperboard cartons. Condition the unit packs in an atmosphere uniformly maintained at 160°F ± 2°F for a period of 48 hours. During exposure, position the unit packs to allow free circulation of air around each pack. Conduct a pouch abuse test using the test apparatus shown in figure 2. For eight ounce unit packs, the drop height shall be 40 inches; for five ounce unit packs, the drop height shall be 64 inches. Drop each unit pack twice, once on each end. Recondition tested unit packs to ambient temperature for at least 24 hours, remove pouches from cartons and examine visually. Any pouch leakage shall be considered a test failure and shall be cause for rejection of the lot.

4.5.8.3 Standard temperature (Type II). Each ISP pouch, filled with either water or a representative food product and processed as specified in the applicable food document, shall be inserted into the carton. Four filled, sealed and thermal processed ISP pouches shall be packed in a fiberboard box conforming to style RSC-L of ASTM D 5118. The fiberboard shall conform to type CF, class D, variety SW, grade 275 of ASTM D 4727/D 4727M, Standard Specification for Corrugated and Solid Fiberboard Sheet Stock (Container Grade) and Cut Shapes. The box shall be closed in accordance with ASTM D 1974. Condition the box of four ISPs in an atmosphere uniformly maintained at 72°F ± 2°F for a period of 48 hours. Conduct a drop test in accordance with ASTM D 5276, Ten Drop Cycle at a height of 21 inches. Immediately after completion of the drop test, conduct a vibration test (on the same box of four ISPs) in accordance with ASTM D 999, at 268 RPM (4.5 Hz) for a period of one hour. Remove ISPs from the box and examine visually. Any cracked, split or leaking ISP at any location, or tear, hole, or puncture through the carton causing a hole in the ISP; or wet or stained carton due to one or more leaking ISPs; or any evidence of food product leakage from ISP shall be considered a test failure and shall be cause for rejection of the lot.

4.5.8.4 Frozen temperature (Type II). Prepare the box of four ISPs as specified in 4.5.8.3, but condition in an atmosphere uniformly maintained at -20°F ± 2°F for a period of 48 hours. While still in frozen state, conduct drop and vibration tests as specified in 4.5.8.3. Remove ISPs from the box and allow to fully thaw prior to visual examination. Any cracked, split or leaking ISP at any location, or tear, hole, or puncture through the carton causing a hole in the ISP; or wet or stained carton due to one or more leaking ISPs; or any evidence of food product leakage from ISP shall be considered a test failure and shall be cause for rejection of the lot.

4.5.9 Carton closure bond strength. Compliance with required bond strength in carton closure shall be verified by visually examining the paperboard flaps or the fiberboard sleeve for evidence of fiber tear after opening. Absence of fiber tear shall be considered a test failure and shall be cause for rejection of the lot.

5. PACKAGING

This section is not applicable to this specification.

6. NOTES

(This section contains information of a general or explanatory nature that may be helpful, but is not mandatory.)

6.1 Intended use. The requirements for the packaging of food in flexible pouches cited by this specification are intended for use in the production of retort food products for individual rations.

6.2 Acquisition requirements. Acquisition documents must specify the following:

a. Title, number, and date of the specification.

b. Type, style, and design required (see 1.2).

c. Conformance inspection (see 4.1).

d. Pouch sizes for SSP (see 3.1.2 and figures).

e. Pouch size for ISP (see 3.1.2 and figure 3).

6.3 Thermal processed products. The preparation and thermal processing of foods in hermetically sealed containers and finished product inspection should be established, controlled and verified by the processor in accordance with FDA (CFR Title 21 Part 113: Low Acid Canned Foods and Part 114: Acidified Foods) and USDA (CFR Title 9 Part 302 Subpart G: Canned Meat and Poultry Products) regulations.

6.4 Pouch material.

6.4.1 Type I pouch material. The US Army Research, Development, and Engineering Command, Natick Soldier Research, Development, and Engineering Center has found that for preformed SSP pouches, a material structure consisting of, from inside to outside, 0.003 to 0.004 inch thick polyolefin, 0.00035 to 0.0007 inch thick aluminum foil, 0.0006 inch thick biaxially oriented polyamide-type 6, and 0.0005 inch thick polyester meets the performance criteria of this specification. Alternatively, the aluminum foil layer and the biaxially oriented polyamide layer may be in either order. For the formed, tray-shaped body of a horizontal form-fill-seal (HFFS) SSP pouch, it has been found that a material structure consisting of, from inside to outside, 0.003 to 0.004 inch thick polyolefin, 0.0006 inch thick biaxially oriented polyamide-type 6, 0.0015 to 0.00175 inch thick aluminum foil and 0.0010-0.0014 inch thick oriented polypropylene meets the performance criteria of this specification. For the lidding material for the HFFS SSP pouch, it has been found that a material structure consisting of, from inside to outside 0.003 to 0.004 inch thick polyolefin, 0.00035 to 0.0007 inch thick aluminum foil and 0.0005 to 0.00075 inch thick polyester meets the performance criteria of this specification. The above values and ranges expressed for the thickness of thin gauge plastic films and aluminum foil are nominal values. A

plus or minus 20% tolerance is typical for thin gauge plastic film thickness measurements and a plus or minus 10% tolerance is typical for aluminum foil thickness measurements.

6.4.2 Type II pouch material. The US Army Research, Development, and Engineering Command, Natick Soldier Research, Development, and Engineering Center has found that for preformed ISP pouches, a material 5-layer structure consisting of, from inside to outside, 0.004 inch thick polyolefin, 0.00098 inch thick biaxially oriented polyamide, 0.00035 inch thick aluminum foil, 0.00059 inch thick biaxially oriented polyamide, and 0.00047 inch thick polyester meets the performance criteria of this specification. The above values and ranges expressed for the thickness of thin gauge plastic films and aluminum foil are nominal values. A plus or minus 20% tolerance is typical for thin gauge plastic film thickness measurements and a plus or minus 10% tolerance is typical for aluminum foil thickness measurements.

6.5 Carton design and material.

6.5.1 Type I Carton design and material. The US Army Research, Development, and Engineering Command, Natick Soldier Research, Development, and Engineering Center has found that a SSP carton design and material conforming to variety I, style I, type A, class a or style XIV, group I or II of PPP-B-566, Boxes, Folding, Paperboard, except that the carton may be made of 16-point bending chips, kraft lined chips or unbleached solid sulfate paperboard or of 17-point low density kraft paperboard having a minimum basis weight for the bending chips and the kraft lined chipboard of 60 pounds per 1000 square feet, a minimum basis weight for the unbleached solid sulfate board of 55 pounds per 1000 square feet or a minimum basis weight for the low density kraft paperboard of 48 pounds per square feet meets the performance criteria of this specification.

6.5.2 Type II Carton design and material. It has been found that a ISP carton constructed of grade 275 fiberboard in accordance with ASTM D 4727/D 4727M, oriented with flutes parallel to the carton width, jointed and hot melt glued along either the vertical length or bottom face of the carton, and then ends closed and compressed and securely taped across the open ends of the carton at their midpoints meets the performance criteria of this specification.

6.6 Subject term (key word) listing.

First Strike Ration® (FSR®)
Humanitarian Daily Ration
Meal, Ready-to-Eat™ (MRE™)
Operational rations
Institutional Size
Single Serving

6.7 Changes from previous issue. Marginal notations are not used in this revision to identify changes with respect to the previous issue due to the extent of the changes.

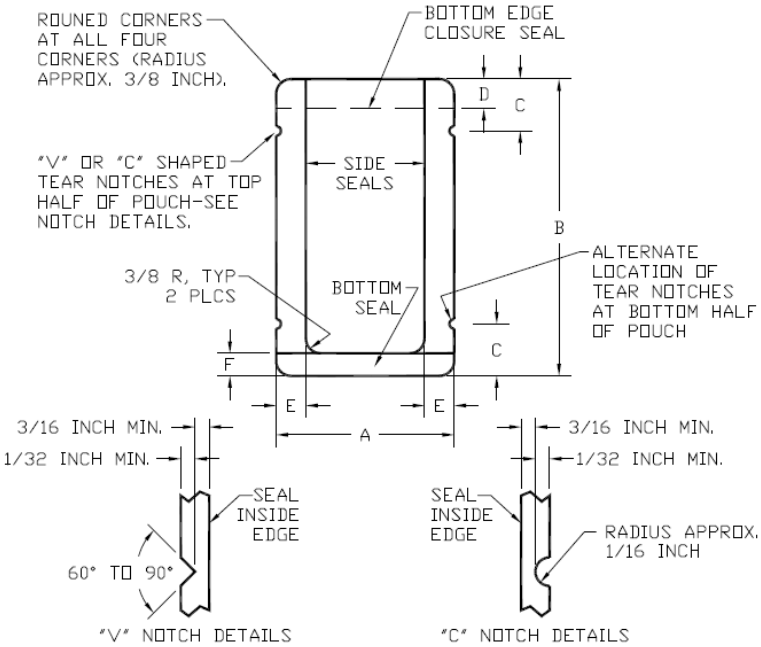

POUCH SIZES	DIMENSIONS IN INCHES					
	A	B	C	D	E	F
5 OUNCE SIZE	4 3/4 (+ 1/16 − 1/8)	6 1/16 TO 6 1/4	1 (± 1/16)	3/4 MAX.	7/32 MIN.	1/8 MIN.
		6 1/4 TO 7 3/8	1 1/2 ± 1/16	1 MAX		

FIGURE 1. Single Serving Pouch

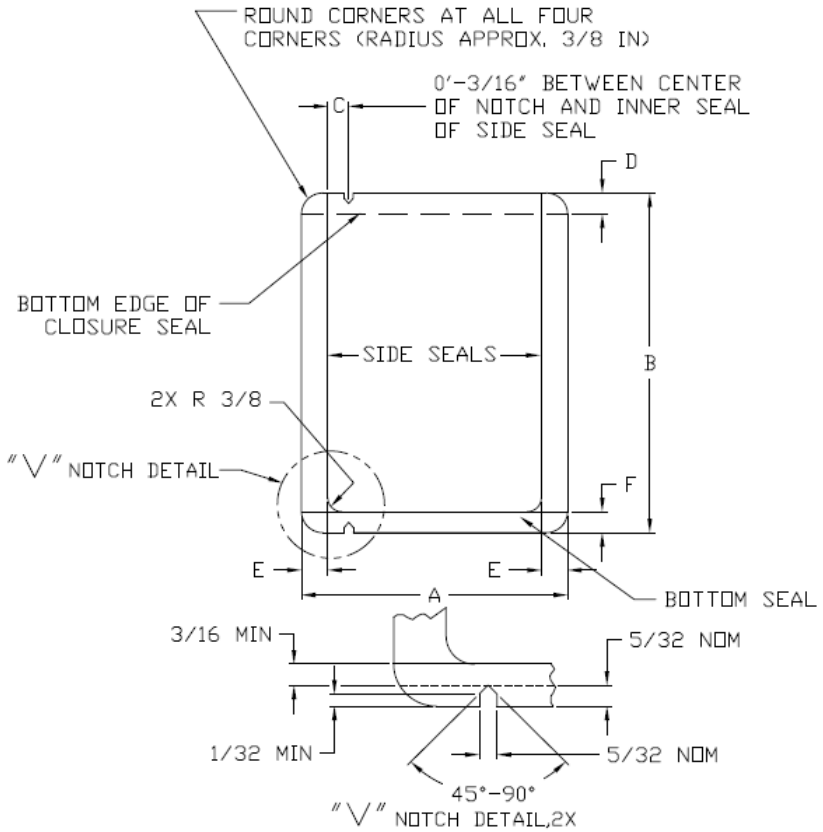

POUCH SIZES	DIMENSION IN INCHES					
	A	B	C	D	E	F
5 OUNCE SIZE 1/	4 3/4 (+1/16 -1/8)	6 1/16 TO 6 1/4	0-3/16	3/4 MAX	7/32 MIN	1/8 MIN
		6 1/4 TO 7 3/8	0-3/16	1 MAX		

~~FIGURE 1A. Directional Tear Pouch~~

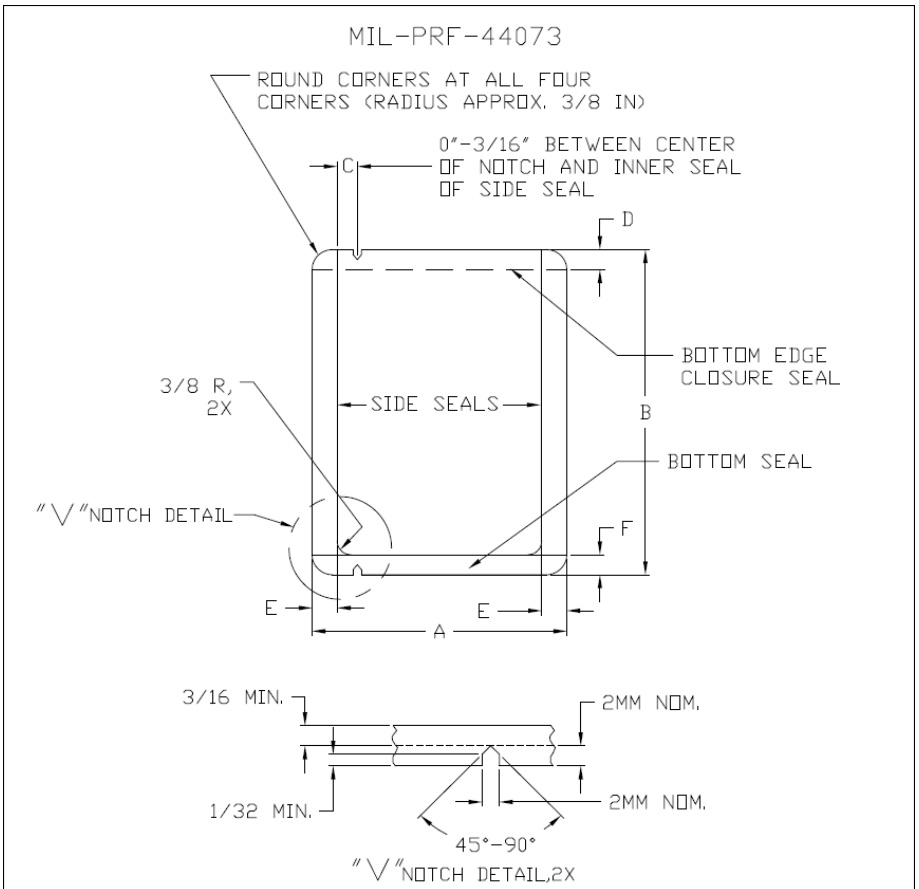

POUCH SIZES	DIMENSION IN INCHES					
	A	B	C	D	E	F
5 OUNCE SIZE 1/	4 3/4 (+1/16 -1/8)	6 1/16 TO 6 1/4	0-3/16	3/4 MAX	7/32 MIN	1/8 MIN
		6 1/4 TO 7 3/8	0-3/16	1 MAX		
PRIMARY 1/ 8 OUNCE SIZE	4 3/4 (+1/16 -1/8)	8 1/8 (+1/8 -1/16)	0-3/16	1 MAX	7/32 MIN	1/8 MIN
ALTERNATE 1/ 8 OUNCE SIZE	5 1/4 (±1/16)	7 1/4 (+1/8 -1/16)	0-3/16	1 MAX	7/32 MIN	1/8 MIN

FIGURE 1A
Revised 12 FEB. 09

FIGURE 1A. Directional Tear Pouch

Comment [C10]: Natick case ES11-052, change 03, 23 Mar 11, to cite seal parameters.

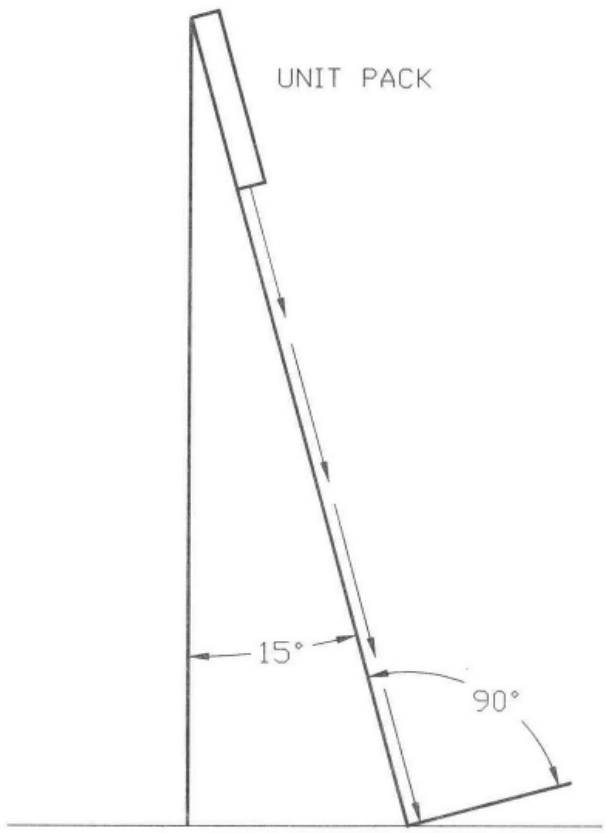

FIGURE 2
POUCH ABUSE TEST APPARATUS

HORIZONTAL, FORM-FILL-SEAL POUCH

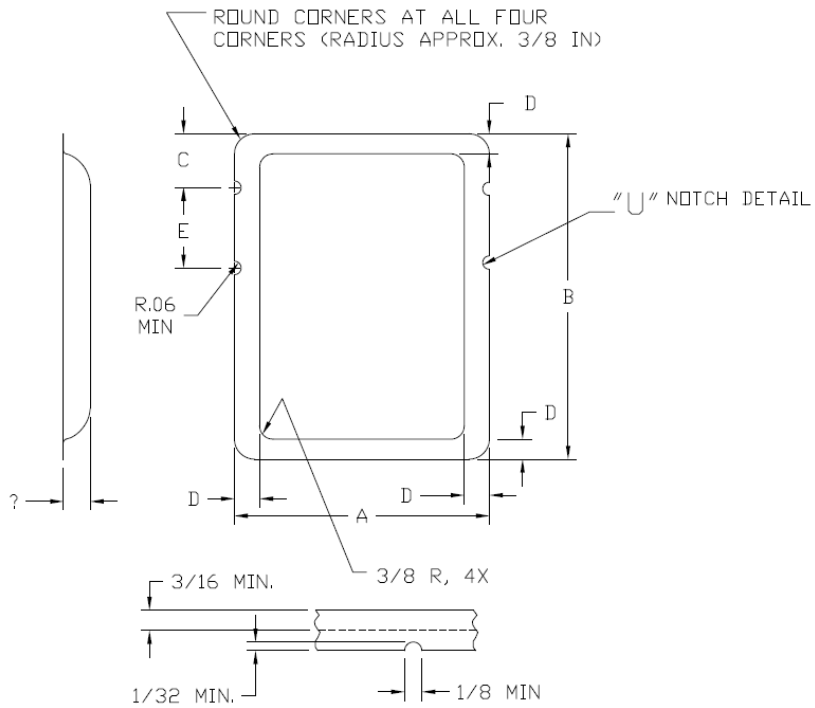

"U" NOTCH DETAIL, 2X OR 4X (AS APPLICABLE 1/)

POUCH SIZES	DIMENSION IN INCHES				
	A	B	C	D	E
5 OUNCE SIZE	4 3/4 (+1/16 -1/8)	6 1/16 TO 6 1/4	1 ±1/16	7/32 MIN	1 1/2±1/16
8 OUNCE SIZE		8 1/8(±1/16-1/8)	1 1/2±1/16		1./

NOTE: 1. FIVE OUNCE SIZE POUHES SHALL HAVE ONE SET OF TEAR NOTCHES (2X) ALL EIGHT OUNCE SIZE POUCHES SHALL HAVE TWO SETS OF TEAR NOTCHES (4X).

~~FIGURE 2A. Horizontal Form-Fill-Seal Pouch~~

HORIZONTAL, FORM-FILL-SEAL POUCH

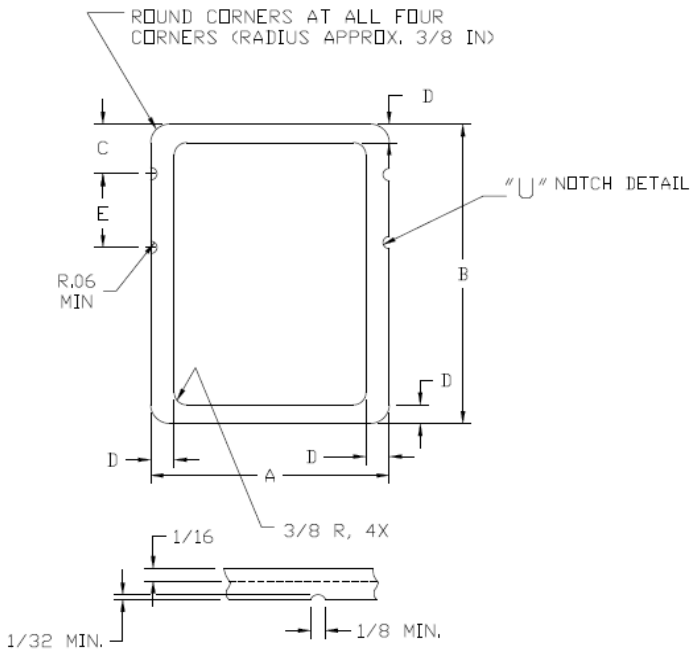

"U" NOTCH DETAIL, 2X OR 4X (AS APPLICABLE 1/)

POUCH SIZES	DIMENSION IN INCHES				
	A	B	C	D	E
5 OUNCE SIZE	4 3/4 (+1/16 −1/8)	6 1/16 TO 6 1/4	1 ±1/16	7/32 MIN	1 1/2±1/16
8 OUNCE SIZE		8 1/8(±1/16-1/8)	1 1/2±1/16		1./

NOTE: 1. FIVE OUNCE SIZE POUCHES SHALL HAVE ONE SET OF TEAR NOTCHES (2X) ALL EIGHT OUNCE SIZE POUCHES SHALL HAVE TWO SETS OF TEAR NOTCHES (4X).

FIGURE 2A. HORIZONTAL FORM-FILL-SEAL POUCH

FIGURE 2A. Horizontal Form-Fill-Seal Pouch

Comment [C11]: Natick case ES11-052, change 03, 23 Mar 11, to cite seal parameters.

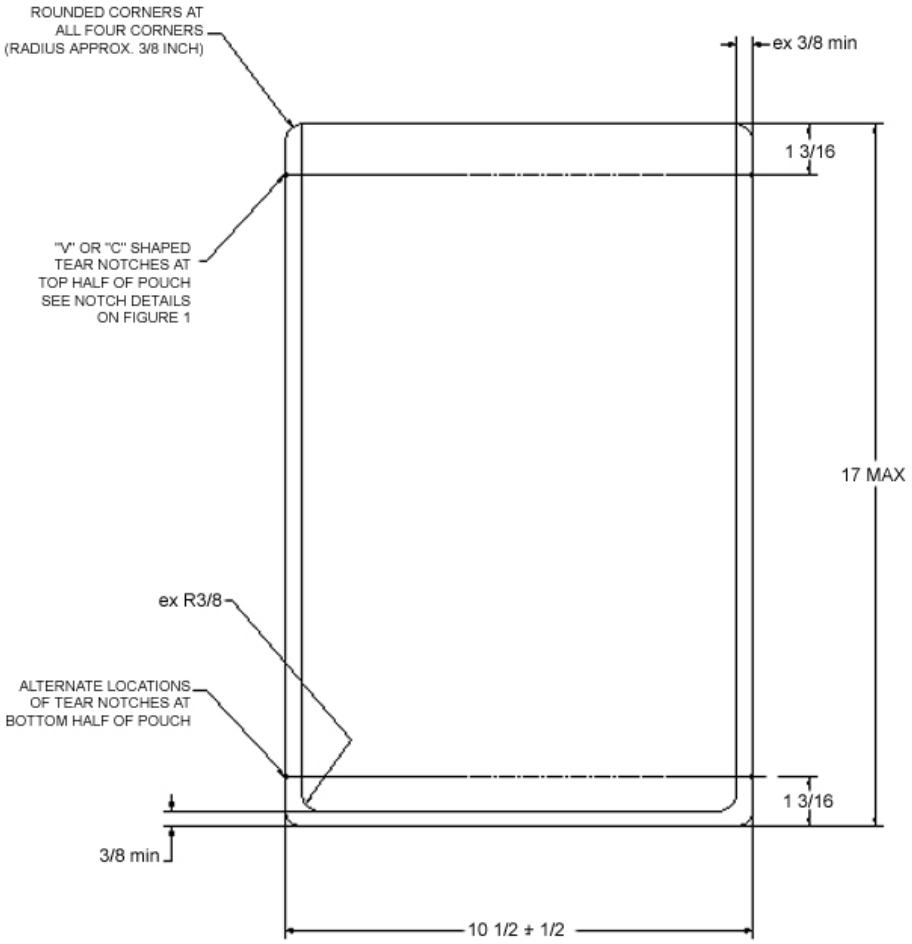

FIGURE 3. Institutional Size Pouch
(Not actual size)

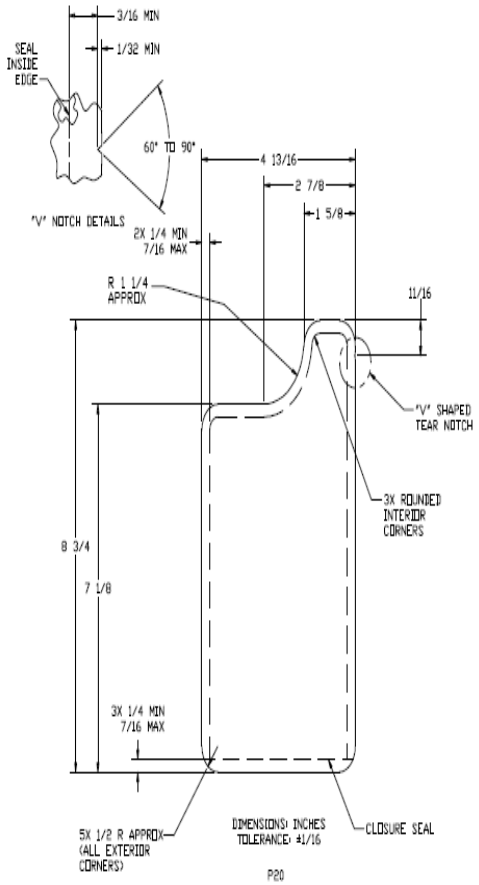

FIGURE 4. Side Spout Pouch

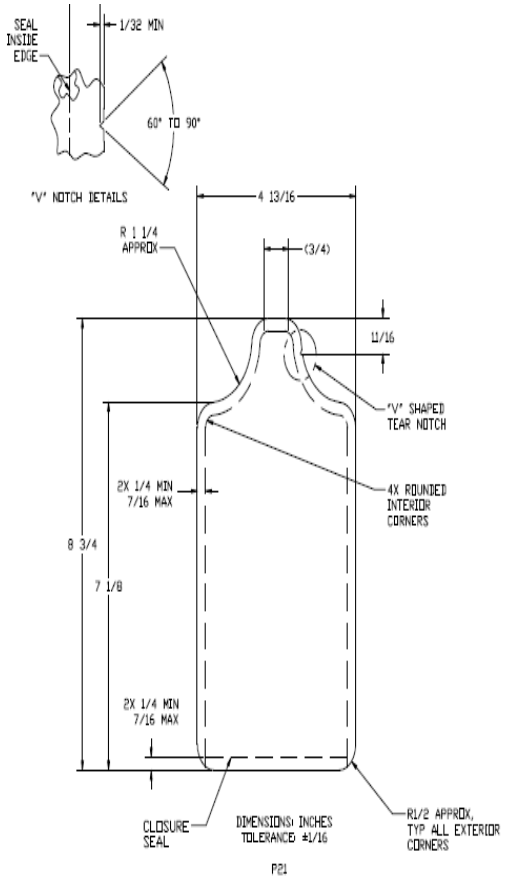

FIGURE 5. Center Spout Pouch

Custodians:
Army - GL
Navy - SA
Air Force - 35

Review activities:
Army - MD, QM
Navy - MC
DLA - SS

Preparing activity:
Army - GL

(Project 89GP-2008-002)

NOTE: The activities listed above were interested in this document as of the date of this document. Since organizations and responsibilities can change, you should verify the currency of the information above using ASSIST Online database at http://assist.daps.dla.mil/.

For DLA Troop Support Website Posting

RDNS-CFF 23 March 2011

TO: DLA Troop Support- Subsistence DSCP-FTRA

SUBJECT: ES11-052; Document Change, Requirements for Ultrasonic Seals for Retort Pouches, MIL-PRF-44073G, Packaging of Food in Flexible Pouches

1. The conventional heat seal used in creating and closing pouches is a well-established packaging technique. Ultrasonic sealing is an alternate technology for closing barrier foil pouches of food. Because of the differences in these methods, appropriate requirements for the ultrasonic seal are being added to MIL-PRF-44073G.

2. When standardizing the ultrasonic sealing process, vendors and inspectors have two major goals to consider. First is to optimize parameters to provide the best and strongest ultrasonic seal attainable. Second is to acknowledge that the historical understanding that closure seals needed to be at least 1/16 inch in width to be considered an 'acceptable seal' is applicable only to heat seals and is not necessarily relevant to ultrasonic seals.

3. Vendors attempting to produce ultrasonic seals that exhibit a minimum 1/16 inch wide seal (using 2.4 mm radius seal bar interface) created inferior seals (squeezing and thinning sealant material away from the seal center line). Trials have indicated that the strongest seals generated by the 2.4 mm ultrasonic seal bar do not yield 1/16 inch wide seals but rather something less wide. Another undesirable effect of non-ideal sealing parameters is the disruption and delamination of film layers through which the vibrational energy of theultrasonic sealing equipment must penetrate to provide the energy to the inner most (sealant) film of the lamination. This is particularly evident as a problem in the interface of the ultrasonic seal and the existing pouch side seals of the preformed pouches that are produced via heat seal.

4. In ultrasonic sealing, the concentration of the sonic energy on the center line of the seal provides the capacity to essentially displace seal contaminants from the intended path of the seal while also providing the energy to affect the seal on and through the cleared continuous pathway. The focus of this optimization effort needs to concentrate on establishing the parameters under which the optimum energy is delivered to generate the strongest possible seal whether it has been through a contaminated zone or not. Discussions with technicians suggest that a minimum 1 mm thickness would provide a more reliable and measurable seal width for the ultrasonic seals.

5. For inspectors, it is suggested that rather than to probe ultrasonic seals that appear to be of questionable thickness or appear inconclusive as to whether there is the presence of a seal channel or other anomaly associated with sealing, that the suspect samples be subjected to the internal pressure test to determine the seal effectiveness. If the closure seal in question passes the internal pressure test, that particular pouch cannot be classified as a seal failure in determination

of acceptability of the lot in question. If the closure seal in question yields or otherwise fails that pouch will be considered a test failure and will be classified as a critical defect and cause for rejection of the lot.

6. Because the attributes of the equipment and the parameters of the optimum ultrasonic seal are different from the traditional heat seal, a parallel but equal set of requirements must be established for the ultrasonic seal. The following changes to MIL-PRF-44073G are recommended for current, pending and future contracts, until the document is formally revised:

a. Para 3.1.2.1. At beginning of sentence, delete "The" and insert "As applicable, the".

b. Para 3.1.4.1. Delete and substitute "3.1.4.1 Closure seal. The closure seal width shall be a minimum 1/8 inch for conventional heat seals or a minimum 1.0 mm for ultrasonic seals. The closure seal shall be free of impression or design on the seal surface that would conceal or impair visual detection of seal defects. The closure seal shall be free of wrinkles, occluded matter, or evidence of entrapped moisture or grease that reduces the closure seal width to less than 1/16 inch at any location along its continuous path for conventional heat seals or reduces the closure seal width to less than 1.0 mm for ultrasonic seals."

c. Table II.

(i) Defects 3 and 4, at end of sentence, insert "for heat seals and less than 1.0 mm for ultrasonic seals. 4/".

(ii) Defect 6, after "1/16 inch" insert "for heat seals and less than 1.0 mm for ultrasonic seals" and at end of defect add "4/".

(iii) Defect 103. Delete and substitute "Minimum heat seal width not as specified in applicable figures."

(iv) Defect 152. Delete and substitute "For heat seals, closure seal width less than 1/8 inch but greater than or equal to 1/16 inch."

(v) Add footnote: "4/ An internal pressure test may be used to verify pouch integrity for ultrasonically sealed pouches that are difficult to measure or quantify during visual inspection."

d. Para 4.5.6, last sentence. After "1/16 inch: insert "for heat seals or less than 1.0 mm for ultrasonic seals".

e. Figures 1A and 2A. Delete and replace with new figures.

7. Attached is Change 03 to MIL-PRF-44073G, Packaging of Food in Flexible Pouches, dated 23 March 2011, with changes highlighted.

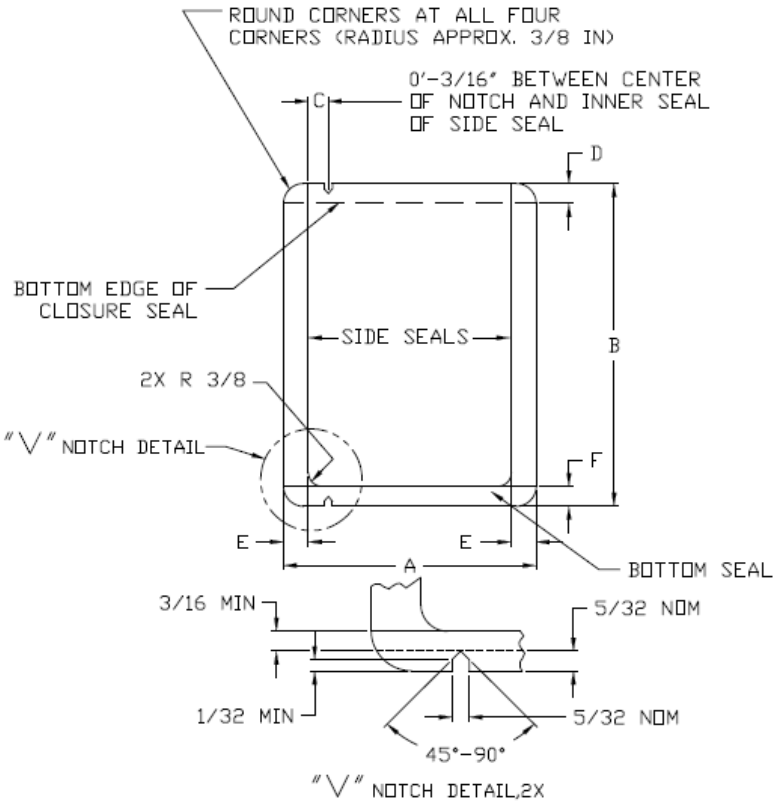

POUCH SIZES	DIMENSION IN INCHES					
	A	B	C	D	E	F
5 OUNCE SIZE	4 3/4 (+1/16 -1/8)	6 1/16 TO 6 1/4	0-3/16	3/4 MAX	7/32 MIN	7/32 MIN
		6 1/4 TO 7 3/8	0-3/16	1 MAX		
PRIMARY 8 OUNCE SIZE	4 3/4 (+1/16 -1/8)	8 1/8 (+1/8 -1/16)	0-3/16	1 MAX	7/32 MIN	7/32 MIN
ALTERNATE 8 OUNCE SIZE	5 1/4 (+1/16)	7 1/4 (+1/8 -1/16)	0-3/16	1 MAX	7/32 MIN	7/32 MIN

FIGURE 1A.

FIGURE 1A. Directional Tear Pouch

HORIZONTAL, FORM-FILL-SEAL POUCH

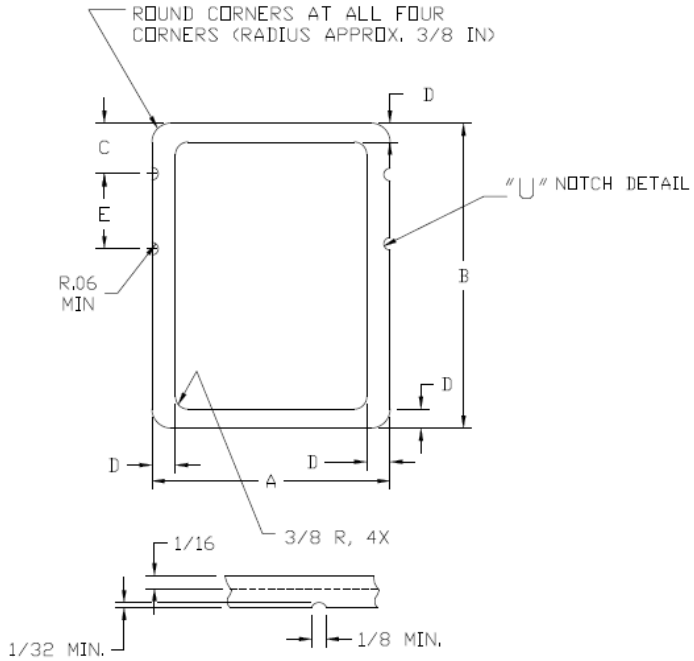

"U" NOTCH DETAIL, 2X OR 4X (AS APPLICABLE 1/)

POUCH SIZES	DIMENSION IN INCHES				
	A	B	C	D	E
5 OUNCE SIZE	4 3/4 (+1/16 -1/8)	6 1/16 TO 6 1/4	1 ±1/16	7/32 MIN	1 1/2±1/16 1/
8 OUNCE SIZE		8 1/8(±1/16-1/8)	1 1/2±1/16		

NOTE: 1. FIVE OUNCE SIZE POUCHES SHALL HAVE ONE SET OF TEAR NOTCHES (2X) ALL EIGHT OUNCE SIZE POUCHES SHALL HAVE TWO SETS OF TEAR NOTCHES (4X).

FIGURE 2A. HORIZONTAL FORM-FILL-SEAL POUCH

FIGURE 2A. Horizontal Form-Fill-Seal Pouch

SECTION C – DESCRIPTION/SPECIFICATION

Specifications and related tier documents applicable to this solicitation/contract:

`http://www.dscp.dla.mil/subs/support/specs/frozen/frozen.asp`

Note: The abbreviation PKG & QAPs below in the Item Descriptions denotes the associated Packaging Requirements and Quality Assurance Provisions for that specific Commercial Item Description (CID).

PART I - TECHNICAL DATA FOR MRE ASSEMBLY

C-1 DESCRIPTION/SPECIFICATION

MEAL, READY-TO-EAT, INDIVIDUAL, Menus 1-12 (Case A); Menu. 13- 24 (Case B); 12 meals per shipping case, ACR-M-032, 8970-00-149-1094

PART II - TECHNICAL DATA FOR CONTRACTOR FURNISHED MATERIAL (CFM) COMPONENTS

C-1 DESCRIPTION/SPECIFICATION

ENTREES

BEEF STRIPS, ASIAN STYLE, SHELF STABLE, W/ vegetables, min 8 oz flex pg, PCR-A-005, 8940-01-591-4193

BEEF RAVIOLI IN MEAT SAUCE, SHELF STABLE, min 8 oz flex pg, PCR-B-021, 8940-01-426-0553

BEEF ROAST W/VEGETABLES, SHELF STABLE, min 8 oz flex pg, PCR-B-035, 8940-01-492-4940

BEEF STEW, SHELF STABLE, min 8 oz flex pg, PCR-B-020, 8940-01-550-1370

BEEF, SOUTHWEST STYLE & BLACK BEANS, W/SAUCE, SHELF STABLE, min 8 oz flex pg, PCR-S-018, 8940-01-578-9100

BRISKET ENTRÉE W/GRAVY, SHELF STABLE, seasoned, sliced, min 8 oz flex pg, PCR-B-050, 8940-01-567-8631

CHEESE TORTELLINI IN TOMATO SAUCE, SHELF STABLE, min 8 oz flex pg, PCR-C-020, 8940-01-397-6661

CHICKEN FAJITA, SHELF STABLE, min 8 oz flex pg, PCR-C-055, 8940-01-525-3605

CHICKEN, NOODLES AND VEGETABLES, SHELF STABLE, in sauce, min 8 oz flex pg, PCR-C-021, 8940-01-426-2282

CHICKEN PESTO PASTA, SHELF STABLE, min 8 oz flex pg PCR–C-069, 8940-01-556-9404

CHICKEN W/TOMATOES & FETA CHEESE, SHELF STABLE, min 8 oz flex pg, PCR-C-077, 8940-01-578-9107

CHILI AND MACARONI, SHELF STABLE, min 8 oz flex pg, PCR-C-027, 8940-01-375-4375

CHILI WITH BEANS, SHELF STABLE, min 8 oz flex pg, PCR-C-062, 8940-01-527-2311,

MEATBALLS IN MARINARA SAUCE, SHELF STABLE, min 7.5 oz flex pg, PCR-M-015, 8940-01-545-4861

MEXICAN STYLE CHICKEN STEW, SHELF STABLE, min 8 oz flex pg, PCR-M-016, 8940-01-588-7957

PENNE W/VEGETARIAN SAUSAGE CRUMBLES, SHELF STABLE, in spicy tomato sauce, min 8 oz flex pg, Type II (whole grain rigata), PCR-P-036, 8940-01-525-3617

PORK SAUSAGE IN CREAM GRAVY, SHELF STABLE, min 8 oz flex pg, PCR-P-047, 8940-01-579-8018

PORK SAUSAGE PATTY, MARBLE FLAVORED, SHELF STABLE, maple flavored, min 2.6 oz flex pg, PCR-P-045, 8905-01-567-8777

RATATOUILLE (MIXED VEG & PENNE), SHELF STABLE, min 8 oz flex pg, PCR-R-012, 8940-01-578-8897

RIB, SHAPED, BARBEQUE FLAVORED PORK PATTY, SHELF STABLE, min 2.6 oz flex pg, PCR-R-013, 8905-01-492-4982

SLOPPY JOE FILLING, SHELF STABLE, min 8 oz flex pg, PCR-S-013, 8940-01-525-3618

SPAGHETTI W/MEAT SAUCE, SHELF STABLE, min 8 oz flex pg, PCR-S-002, 8940-01-224-5675

TUNA, SHELF STABLE, lemon-pepper, min 3 oz flex pg, form I, color a, packing media 1, flavor 1, sodium level (a), CID A-A-20155, PKG AND QAPS, 8905-01-579-8004

VEGETABLE LASAGNA, SHELF STABLE, min 8 oz flex pg, PCR-V-008, 8940-01-557-4040

STARCHES AND SOUPS

BREAD STICKS, SHELF STABLE, ITALIAN, fort, 4 ct pg, min 2 oz flex pg, PCR-S-009, 8920-01-579-8024

CORNBREAD, SHELF STABLE, min 2.5 oz flex pg, PCR-C-075, 8920-01-567-8725

CORNBREAD STUFFING, SHELF STABLE, min 5 oz flex pg., PCR-C-066, 8920-01-545-1770

GRANOLA WITH MILK AND BLUEBERRIES, , SHELF STABLE, min 57 gm flex rehydrating pg, Type I, PCR -G-003, 8920-01-556-1172

GRANOLA W/MILK & BANANAS, SHELF STABLE, min 57 gm rehydrating flex pg, Type II, PCR-G-003, 8920-01-579-7957

POTATOES, AU GRATIN, SHELF STABLE, min 5.0 oz flex pg, PCR-P-048, 8915-01-588-9887

POTATOES, MASHED, GARLIC, SHELF STABLE, min 5 oz flex pg, flavor II, PCR-P-011, 8915-01-578-9072

REFRIED BEANS, SHELF STABLE, min 5 oz flex pg, PCR-R-007, 8940-01-509-8209

RICE, FRIED, SHELF STABLE, min 5 oz flex pg, Type IV, PCR-R-001, 8940-01-545-5855.

RICE & BEANS, SANTA FE STYLE, SHELF STABLE, min 5 oz flex pg, PCR-S-019, 8940-01-580-4428

SOUP, POTATO CHEDDAR, SHELF STABLE, flavored w/bacon, min 5.0 oz flex pg, PCR-P-046, 8935-01-567-8698

SNACK BREAD, WHEAT, SHELF STABLE, fort, min 2 oz flex pg, type I, PCR-S-009, 8920-01-458-7325 (Style A) or 8920-01-579-7967 (Style B)

SNACK BREAD, MULTIGRAIN, SHELF STABLE, fort, min 2 oz flex pg, Type V, PCR-S-009, 8920-01-588-9007

FRUITS

COBBLER, CHERRY BLUEBERRY, min 5.0 oz flex pg, PCR-C-058, 8920-01-525-3546

CRANBERRIES, OSMOTICALLY DRIED, sliced, min 56 gram flex, pg, Type VII, Fort a, CID A-A-20299, PKG & QAPs, 8915-01-514-9298

RAISINS, OSMOTICALLY DRIED, min 43 gm flex pg, Type IX, Variety A, Class (1), CID A-A-20299, PKG & QAPs, 8915-01-525-3543

DESSERTS AND SNACKS

BEEF SNACKS, STRIPS, CURED, SHELF STABLE, min 0.8 oz, flex pg, Variety A, Type II, Style a, Flavor (a), pg c, CID A-A-2009, PKG & QAPs , 8940-01-429-7067

TURKEY SNACKS, NUGGETS, CURED, SHELF STABLE, min 43 gm flex pg, Variety B, Type III, Style b, Class 4, Flavor (a), CID A-A-20298, PKG & QAPs, 8940-01-578-8901

CINNAMON BUN, SHELF STABLE, square/rectangular shape, min 3.5 oz flex pg, Type II, MIL-DTL-32221, 8920-01-578-9089

COOKIES, SUGAR, PATRIOTIC, Style D, Bake Type a, Shape b, CID A-A-20295, PKG & QAPs, 8920-01-556-9408

CORN KERNELS, TOASTED, min 2.0 oz (57 gm) flex pg, Type VI, Flavor 1, CID A-A-20195, PKG & QAPs, 8940-01-578-8895

CRACKERS, FORTIFIED, PLAIN, approx 4 in. (10.160 cm) square, partially scored but not separated, 2/bag, flex and vac pg, Type I, Pg C, PCR-C-037, 8920-00-149-0795

CRACKERS, FORTIFIED, VEG, approx 4 in. (10.160 cm) square, partially scored but not separated, 2/bag, flex and vac pg, Type II, Pg C, PCR-C-037, 8920-01-450-1921

CRACKERS, JALAPENO CHEDDAR CHEESE FILLED, min 42 gm flex pg, Type VIII, Flavor 1, CID-A-A-20195, PKG & QAPs, 8940-01-591-4042

CRACKERS, SANDWICH, CHEDDAR CHEESE FILLED, min 50 gm pg, Type VII, Flavor 1, CID A-A-20195, PKG & QAPs, 8920-01-568-5158

CRACKERS, SANDWICH, PEPPERONI PIZZA CHEESE FILLED, min 50 gm pg, Type VII, Flavor 2, CID A-A-20195, PKG & QAPs, 8920-01-568-5168

DESSERT PDR, PUDDING, VANILLA, min 75 gm flex hydrating pouch, Type I, Prep Method C, Flavor a, CID A-A-20344, PKG & QAPs, 8940-01-556-0048

DESSERT PDR, PUDDING, CHOCOLATE, min 75 gm flex hydrating pouch, Type I, Prep Method C, Flavor b, CID A-A-20344, PKG & QAPs, 8940-01-556-0061

FIRST STRIKE ENERGY BAR, SHELF STABLE, CHOCOLATE, reg size, provides min 49% carbs, 2.3 oz commercial foil wrapped pg, Style A, Flavor I, Pg C, PCR-F-001, 8940-01-551-6059

FIRST STRIKE ENERGY BAR, SHELF-STABLE, APPLE CINNAMON, reg size, provides min 49% carbs, 2.3 oz commercial foil wrapped pg, Style A, Flavor II, Pg C, PCR-F-001, 8940-01-551-6056

ALMONDS, DRY ROASTED, SMOKE FLAVORED, UNBLANCHED, min 19 gm flex pg, Type IX, CID A-A-20164, PKG & QAPs, 8925-01-525-3597

CASHEWS, HALVES, JALAPENO, 1 oz. flex packaged, Type VI, Size 2, Style C, CID A-A-20164, PKG & QAPs, 8925-01-578-5357

PEANUTS, DRY ROASTED, SALTED, 1 oz. flex packaged, Type V, Style A, CID A-A-20164, PKG & QAPs, 8925-01-450-4234

NUT RAISIN MIX, min 56 gm flex pg, Peanuts, Raisins, Walnuts, Almonds, and Filberts, Type I, Pg C, PCR-N-003, 8940-01-458-7305

NUT RAISIN MIX, W/PAN COATED CHOC DISKS, min 66 gm flex pg, Peanuts, Walnuts, Almonds, Filberts, Raisins, & Choc Disks, Type II, Pg C, PCR-N-003, 8940-01-523-0786

PRETZELS, BAVARIAN, min 1 oz (28.35 gm) flex pg, Type II, Style A, CID A-A-20195, PKG & QAPs, 8940-01-426-2494

PRETZELS, RODS, min 1 oz (28.35 gm) flex pg, Type II, Style B, CID A-A-20195, PKG & QAPs, 8940-01-426-2496

PRETZEL, STICKS, min 1 oz (28.35 gm) flex pg, Type II, Style C, CID A-A-20195, PKG & QAPs, 8940-01-426-2499

PRETZELS, TWIST, min 1 oz (28.35 gm) flex pg, Type II, Style D, CID A-A-20195, PKG & QAPs, 8940-01-426-2497

PRETZELS, NUGGETS, min 1 oz (28.35 gm), flexibly packaged, Type II, Style E, PKG & QAPs, CID A-A-20195, 8940-01-426-2498

PRETZELS, CHEDDAR AND NACHO CHEESE FILLED, min 51 gm flex pg, Type II, Style F, Flavors 1 and 2, CID A-A-20195, PKG & QAPs, 8940-01-479-1850

SNACK CRACKERS, BAKED, CHEDDAR CHEESE, min 47 gm flex pg, Type V, Flavor 1, CID A-A-20195, PKG & QAPs, 8940-01-525-3549

SNACK CRACKERS, BAKED, HOT & SPICY CHEESE, min 47 gm flex pg, Type V, Flavor 2, CID A-A-20195, PKG & QAPs, 8940-01-556-9440

CORN KERNELS, TOASTED, min 2.0 oz (57 gm) flex pg, Type VI, Flavor 1, CID A-A-20195, PKG & QAPs, 8940-01-578-8895

TOASTER PASTRY, CHOCOLATE CHIP, FROSTED, 1.6-2.2 oz (45 to 62 gm) ind serv pg, Type 1, Style B, Flavor 12, Fort b, Serv (a), Pg C, Grain Comp (1), CID A-A-20211, PKG & QAPs, 8920-01-553-3111

TOASTER PASTRY, BROWN SUGAR CINNAMON, FROSTED, 1.6-2.2 oz (45 to 62 gm) ind serv pg, Type I, Style B, Flavor 3, Fort b**,** Serv (a), Grain Comp (1), CID A-A-202111, PKG & QAPs, 8920-01-527-8360

TURNOVER, SHELF STABLE, APPLE FILLED, semicircular shape, min 1.3 oz flex pg, Type III, MIL-DTL-32221, 8920-01-579-7973

CANDY

CANDY, LICORICE, CHERRY, BITE SIZE, min 63 gm flex pg, Type X, Shape B, Flavor 1, CID A-A-20177, PKG & QAPs , 8925-01-556-9413

CANDY, MINT TABLETS, CAFFEINE, PEPPERMINT, ROUND, min 11 gm pg, Type XII, Style A, Flavor 1, CID A-A-20177, PKG & QAPs, 8925-01-578-5253

CANDY, PAN-COATED, FRUIT FLAVORED TAFFY DISKS, assorted flavors/colors, min 62 gm flex pg, Type VI, Shape A, Flavor 2, Style A, CID A-A-20177, PKG & QAPs, 8925-01-426-1373

CANDY, PAN-COATED, FRUIT FLAVORED DISKS, SWEET AND SOUR, min 2.08 oz (59 gm) flex pg, Type VI, Shape A, Flavor 2, Style D, CID A-A-20177, PKG & QAPs, 8925-01-591-4123

CANDY, PAN-COATED, CHOC DISKS, assorted colors, min 1.5 oz (43 gm) pg, Type VI, Shape A, Flavor 1, CID A-A-20177, PKG & QAPs, 8925-01-008-0960

CANDY, PAN-COATED, CHOC DISKS, CHOC W/ PEANUTS, assorted colors, min 1.62 oz. flex pg, Type VI, Shape B, flavor 1, CID A-A-20177, PKG & QAPs, 8925-01-512-7627

CANDY, PAN-COATED, CHOCOLATE W/PEANUT BUTTER, assorted colors, 1.63 oz., Type VI, Shape A, Flavor 4, CID A-A-20177, PKG & QAPs, 8925-01-493-4684

CANDY, PAN-COATED, FRUIT FLAVORED DISKS, BERRY, min 2.2 oz flex pg, Type VI, Shape A, Flavor 2, Flavor Style b, CID A-A-20177, PKG & QAPs, 8925-01-545-0847

CANDY, TOFFEE, CHOC FLAVORED, roll or cube, flex pg, Type II, Style A or B, CID A-A-20177, PKG & QAPs, 8925-01-556-9428,

BEVERAGES

DAIRYSHAKE PDR, CHOC, FORT W/CALCIUM & VIT D, min 100 gm flex pg, PCR-D-002, 8910-01-487-1644

DAIRYSHAKE PDR, STRAWBERRY, FORT W/ CALCIUM & VIT D, min 100 gm flex pg, PCR-D-002, 8910-01-487-1623

DAIRYSHAKE PDR, STRWBRRY-BANANA, FORT W/ CALCIUM & VIT D, 100 gm flex pg, PCR-D-002, 8910-01-556-0071

DAIRYSHAKE PDR, VANILLA, FORT W/CALCIUM & VIT D, min 100 gm flex pg, PCR-D-002, 8910-01-487-1640

OTHER ITEMS

BAG, BEVERAGE, HOT, ZIP-LOCK POLYBAG, MIL-PRF-32176

HOT SAUCE, min 1/8 oz flex pg, Type II, CID A-A-20097, PKG & QAPs, 8950-01-578-9037

NATURAL BUTTER FLAVORED GRANULES, SPRAY DRIED, min 2 gm pg, Type I, Style A, Pg 1, CID A-A-20351, PKG & QAPs, 8940-01-556-9435

PEPPER, RED, GROUND, 2gm foil laminate pg, CID A-A-A-20001, PKG & QAPs, 8950-01-487-1582

RATION SUPPLEMENT, FLAMELESS HEATER, for MRE, <u>for ration assembly only</u>, MIL-R-44398, 8970-01-349-7049

SEASONING BLEND, SALT FREE, 0.6 gm foil laminate pg, CID A-A-A-20001 , PKG & QAPs, 8950-01-487-1626

SPOON, PICNIC PLASTIC, HIGH IMPACT, 7 in, Type IV, Item 13, CID A-A-3109, PKG & QAPs, 7340-01-508-2742

ACCESSORY COMPONENTS

CHEWING GUM, TABLET, SUGAR-FREE, FLAVORED, 2/pg, w/o caffeine, Type I, Size B, Style 1, Class 3, Flavors A or C, CID A-A-20175, PKG & QAPs, 8925-01-523-4997

COFFEE, INSTANT, FREEZE DRIED, Type III, Style A, CID A-A-20184, PKG & QAPs, 8955-01-304-3619

HAND CLEANER TOWELETTE, UNSCENTED, WHITE, pre-moistened paper in a packet, water based, Type II, CID A-A-461, PKG & QAPs, 8520-01-507-9741

MATCHES, SAFETY, Paper Matches in book form, 50 books per box, Standard pack, Type I, Class B, CID- A-A-59489, PKG & QAPs, 9920-00-174-3194

PAPER, TOILET TISSUE, SHEET FORM PACKET, sheet size 114.3 mm by 114.3 mm (4.5 in by 4.5 in.) 12 two ply or 24 one ply sheets per packet, Style II, Type A or B sheet size B, CID A-A-59594, PKG & QAPs, 8540-01-508-3708

SALT, TABLE IODIZED, FINE GRANULATED OR EVAPORATED, min 4 gm pg, US Food Chemicals Codex Sodium, Chloride Monograph, 8950-00-641-8980

SUGAR, REFINED GRANULATED, CANE OR BEET, min 1/7 oz pg, Type I, Style A, CID A-A-20135, PKG & QAPs, 8925-00-205-3144

SUGAR SUBSTITUTES, NON-CARBOHYDRATE, SUCRALOSE, Type IV, CID- A-A-20178, PKG & QAPs, 8925-01-557-4041

C-2 DATE OF PACK

ASSEMBLY

1. For assembled ration: Acceptance will be limited to assembled rations containing components, including the flameless ration heater, which have been processed and packed subsequent to date of award, except as otherwise specified below.

2. For crackers at the ration assembly: The crackers shall not be more than 90 days old at time of unit packaging.

COMPONENTS (ENTREES, STARCHES AND SOUPS, FRUITS, DESSERTS AND SNACKS, CANDY, BEVERAGES, OTHER ITEMS, ACCESSORY COMPONENTS)

1. For CFM Entrees, Starches and Soups, Fruits, Desserts and Snacks, Candy, Beverages, Edible Other Items, and Edible Accessory Components: Acceptance will be limited to product processed and packed subsequent to date of award.

2. For CFM seasonal crop component items (i.e., peanuts, raisins): Acceptance will be limited to product processed and packed subsequent to date of award and from the latest season's crop.

C-3 MISCELLANEOUS REQUIREMENTS

ASSEMBLY

1. Compliance with the provisions contained in Title 21, Code of Federal Regulations Part 110 "Current Good Manufacturing Practice in Manufacturing, Packaging or Holding Human Food," and all regulations referenced herein, is required. In addition, the contractor is required to comply with all with the provisions contained within specific parts of the Code of Federal Regulations. For example, low-acid canned food manufacturers, Part 110 and 113 are applicable.

2. PRODUCT SANITARILY APPROVED SOURCE REQUIREMENTS
As required by 48 CFR 246.471-1 Subsistence, AR 40-657, Veterinary/Medical Food Inspection and Laboratory Service, DLAR 4155.3, inspections of Subsistence Supplies and Services, DLAD 52.246-9044, Sanitary Conditions, and as clarified by the Armed Forces Food Risk Evaluation Committee, all Operational Ration Food Components will originate from sanitarily approved establishments. Acceptable sanitary approval is constituted by listing in the "Directory of Sanitarily Approved Food Establishments for Armed Forces Procurement," published by the U.S. Army Veterinary Command (VETCOM), or an establishment inspected and approved by the U.S. Department of Agriculture (USDA) or the U.S. Department of Commerce (USDA) and possessing a USDA/USDC establishment number. This requirement applies to all GFM and CFM Operational Ration Food Components and to all Operational Ration types. Requests for inspection and "Directory" listing by VETCOM will be routed through DLA Troop Support FTR for coordination and action. Situations involving sole sources of supply, proprietary supply sources, and commercial Brand Name items will be evaluated directly by the Chief, DLA Troop Support FTR, in coordination with the Chief, Approved Sources Division, VETCOM.

3. Approval or acceptance of a PDM shall not constitute a waiver of any specification requirement unless specifically stated by the Contracting Officer.

COMPONENTS (ENTREES, STARCHES AND SOUPS, FRUITS, DESSERTS AND SNACKS, CANDY, BEVERAGES, OTHER ITEMS, ACCESSORY COMPONENTS)

1. This solicitation incorporates the entrée's, starch's and soup's, fruit's, dessert's and snack's, candies', beverage's, other item's, and accessory component's individual performance-based contract requirements (PCRs), product-based requirements (PCRs), military detail documents (MIL-DTLs), military performance documents (MIL-PRFs), Commercial Item Descriptions (CIDs), and Packaging Requirements and Quality Assurance Provisions (PKG&QAPs) to form an integrated technical data package. Individual quality assurance and packaging provisions are contained in each PCRs. ALL requirements, including Performance Requirements, Quality Assurance Provisions, and Packaging Requirements for the appropriate PCR apply.

2. A nutritional analysis for each product requiring a Performance-based Contract Requirement (PCR), Military Detail Specification (MIL-DTL) or Product Contract Requirement (PCR) shall be provided to the U.S. Army Natick Soldier Research, Development & Engineering Center (NSRDEC) after award of the contract and each time there is a major formulation change. During the course of the contract performance a nutritional analysis for each new product requiring a PCR or MIL-DTL shall be provided to NSRDEC. The nutritional analysis shall be generated using Genesis(r) R&D, a product development and labeling software developed by ESHA Research, version 9.6 or higher and be sent electronically to NSRDEC (ATTN: Kristina.Howard1@us.army.mil). For each item, the Genesis recipe files shall be provided for 100-gram portion sizes along with the food item files for unique items entered into the contractors' database. The ingredients and the weight of each ingredient shall be included in each formulation. The nutrients included shall be as follows: weight (g); kilocalories; protein (g); carbohydrates (g); dietary fiber (g); fat-total (g), fat-saturated (g); fat-trans (g); fat-monounsaturated (g); fat-polyunsaturated (g); cholesterol (mg); water (g); ash (g); vitamin A (IU); thiamin-vitamin B1 (mg); riboflavin-vitamin B2 (mg); niacin-vitamin B3 (mg); vitamin B6 (mg); vitamin B12 (mcg); vitamin C (mg); vitamin D (mcg); vitamin E-alpha equivalents (mg); folate (mcg); vitamin K (mcg); calcium (mg); iron (mg); fluoride (mg); iodine (mcg); iron (mg); magnesium (mg); phosphorus (mg); potassium (mg); selenium (mcg); sodium (mg); zinc (mg). The nutrients as required under the Nutrient content paragraph and the verification of the nutrients as required under the Methods of inspection paragraph in each Performance-based Contract Requirement or Product Contract Requirement document is still mandatory.

3. Compliance with the provisions contained in Title 21, Code of Federal Regulations Part 110 “Current Good Manufacturing Practice in Manufacturing, Packaging or Holding Human Food,” and all regulations referenced herein, is required. In addition, the contractor is required to comply with all with the provisions contained within specific parts of the Code of Federal Regulations. For example, low-acid canned food manufacturers, Part 110 and 113 are applicable.

4. PRODUCT SANITARILY APPROVED SOURCE REQUIREMENTS
As required by 48 CFR 246.471-1 Subsistence, AR 40-657, Veterinary/Medical Food Inspection and Laboratory Service, DLAR 4155.3, inspections of Subsistence Supplies and Services, DLAD 52.246-9044, Sanitary Conditions, and as clarified by the Armed Forces Food Risk Evaluation Committee, all Operational Ration Food Components will originate from sanitarily approved establishments. Acceptable sanitary approval is constituted by listing in the "Directory of Sanitarily Approved Food Establishments for Armed Forces Procurement," published by the U.S. Army Veterinary Command (VETCOM), or an establishment inspected and approved by the U.S. Department of Agriculture (USDA) or the U.S. Department of Commerce (USDA) and possessing a USDA/USDC establishment number. This requirement applies to all GFM and CFM Operational Ration Food Components and to all Operational Ration types. Requests for inspection and "Directory" listing by VETCOM will be routed through DLA Troop Support FTR for coordination and action. Situations involving sole sources of supply, proprietary supply sources, and commercial Brand Name items will be evaluated directly by the Chief, DLA Troop Support FTR, in coordination with the Chief, Approved Sources Division, VETCOM.

5. Approval or acceptance of a PDM shall not constitute a waiver of any specification requirement unless specifically stated by the Contracting Officer.

SECTION D – PACKAGING AND MARKING

PART I - TECHNICAL DATA FOR MRE ASSEMBLY

D-1 PACKAGING:

Packaging requirements applicable to subassembly packet/accessory packets, time-temperature indicator (TTI) labels, meal bags, subassembly/accessory packet assembly, and meal assembly are specified in Section D-1 of ACR-M-032.

D-2 LABELING:

Labeling requirements applicable to subassembly/accessory packets and meal bags are specified in Section D-2 of ACR-M-032.

D-3 PACKING:

Packing requirements are specified in Section D-3 of ACR-M-032.

D-4 UNITIZATION:

Unitization requirements are specified in Section D-4 of ACR-M-032. Unit load height shall not exceed 44 inches. 1/ 2/

1/ Pallets shall conform to requirements cited in the General Requirements Section of DLA Troop Support FORM 3507.

2/ Three (3) stringer construction is acceptable.

D-5 MARKING:

ASSEMBLED RATION SHIPPING CONTAINERS 1/2/: In accordance with DLA Troop Support 3556, and Section D-5 of ACR-M-032. The following markings shall be applied to the shipping cases end panel. The markings shall be positioned on the end panel as specified in Section D-5 of ACR-M-032.

8970-00-149-1094
MEAL, READY-TO-EAT, INDIVIDUAL
12 MEALS A/A
WT. _____CU. _____
CONTRACT NO.____
NAME AND ADDRESS OF ASSEMBLY CONTRACTOR
U. S. GOVERNMENT PROPERTY –
COMMERCIAL RESALE IS UNLAWFUL

1/ The shipping containers shall contain all of the required markings. The ration assembler shall be responsible for applying the required markings. The shelf life for the assembled ration is 36 months, and shall be used in computing the Inspection/Test date.

2/ For line items scheduled for delivery to controlled storage, the following additional special markings shall be printed on pressure sensitive labels. One label shall be applied to each case end panel on the end opposite the contractual markings and one label shall be applied adjacent to the unit load markings and shall read as follows:

DLA Troop Support OWNED STOCKS (ACCT. NO. SCO300)

NOTICE
THIS PRODUCT HAS BEEN HELD UNDER CONTROLLED TEMPERATURE AND HUMIDITY CONDITIONS AND SHOULD NOT BE CONSIDERED OVERAGE BECAUSE OF DATE OF PACK AND THE DATE OF PACK SHOULD NOT BE THE CONTROLLING FACTOR IN DETERMINING ISSUANCE AND UTILIZATION OF THE PRODUCT. FURTHER REFRIGERATION IS NOT REQUIRED.

The lettering of the above label shall be 1/4 inch solid letters with the exception of the word “NOTICE” which shall be 1/2 inch solid letters. Alternatively, and solely at the contractor’s option, the controlled storage markings as described above may be preprinted on the shipping container or otherwise marked under any applicable requirements cited for marking of shipping containers. Under this alternative, it is the responsibility of the contractor to determine the quantity, if any, of such preprinted shipping containers that will be necessary and it remains the

responsibility of the contractor to properly mark the shipping containers as required by contractual documents.

When the shipping container contains FRHs, in order to be in compliance with OSHA requirements, the following information must appear on a major flap of the shipping case closure immediately to the right of the marked end panel.

> "Note: WATER ACTIVATED Flameless Ration Heater,
> NSN 8970-01-321-9153, supplied in each menu bag." (Upper case letters not more than 1/4 inch high; lower case letters not less than 3/16 inch high).

ASSEMBLED RATION UNIT LOADS:

Unit loads shall be marked in accordance with DLA Troop Support 3556 except the identification, contract data, and special markings shall not apply, and in lieu thereof, unit loads shall be marked as follows:

A. GROSS WEIGHT AND CUBE 1/
B. NUMBER OF SHIPPING CONTAINERS PER LOAD (E.G., 48 CS).

Marking may be accomplished by stenciling, printing or by pressure sensitive labels and shall be positioned on two adjacent sides of the load. Size of lettering shall be not less than 1/2 inch and shall be black. Markings shall be legible, non-fading and durable.
1/ Gross weight and cube shall include the weight and dimensions of the pallet base. The gross weight and cube may be determined by weighing and measuring 5 or more fully unitized loads (or weighing components separately) for determining the average weight and cube of the unit load.
In addition to the above marking requirements, each unit load shall be provided with a Material Safety Data Sheet (MSDS) in accordance with MIL-R-44398. The MSDS shall be placed inside a clear plastic sleeve, or a translucent plastic sleeve clearly printed in dark contrasting ink with "MSDS ENCLOSED". The plastic sleeve shall be securely attached to one side of the unit load with pressure sensitive tape or adhesive. A copy of the MSDS must be included with the shipping papers and a copy must also be placed in the vehicle manifest.

D-6 SECTION D CLAUSES

The following clauses are incorporated by reference:

52.211-9010 Shipping Label Requirements MIL-STD-129P (MAY 2006) DLAD

52.211-9033 Packaging And Marking Requirements (APR 2008) DLAD

52.223-9000 Material Safety Data Sheets and Hazard Warning Labels (MAR 1992) DLAD

The following clauses are incorporated in full text:

FAR 52.223-3 -- Hazardous Material Identification and Material Safety Data (Jan 1997)

(a) *"Hazardous material,"* as used in this clause, includes any material defined as hazardous under the latest version of Federal Standard No. 313 (including revisions adopted during the term of the contract).

(b) The offeror must list any hazardous material, as defined in paragraph (a) of this clause, to be delivered under this contract. The hazardous material shall be properly identified and include any applicable identification number, such as National Stock Number or Special Item Number. This information shall also be included on the Material Safety Data Sheet submitted under this contract.

Material *(If none, insert "None")*	**Identification No.**

(c) This list must be updated during performance of the contract whenever the Contractor determines that any other material to be delivered under this contract is hazardous.

(d) The apparently successful offeror agrees to submit, for each item as required prior to award, a Material Safety Data Sheet, meeting the requirements of 29 CFR 1910.1200(g) and the latest version of Federal Standard No. 313, for all hazardous material identified in paragraph (b) of this clause. Data shall be submitted in accordance with Federal Standard No. 313, whether or not the apparently successful offeror is the actual manufacturer of these items. Failure to submit the Material Safety Data Sheet prior to award may result in the apparently successful offeror being considered nonresponsible and ineligible for award.

(e) If, after award, there is a change in the composition of the item(s) or a revision to Federal Standard No. 313, which renders incomplete or inaccurate the data submitted under paragraph (d) of this clause, the Contractor shall promptly notify the Contracting Officer and resubmit the data.

(f) Neither the requirements of this clause nor any act or failure to act by the Government shall relieve the Contractor of any responsibility or liability for the safety of Government, Contractor, or subcontractor personnel or property.

(g) Nothing contained in this clause shall relieve the Contractor from complying with applicable Federal, State, and local laws, codes, ordinances, and regulations (including the obtaining of licenses and permits) in connection with hazardous material.

(h) The Government's rights in data furnished under this contract with respect to hazardous material are as follows:

(1) To use, duplicate and disclose any data to which this clause is applicable. The purposes of this right are to --

(i) Apprise personnel of the hazards to which they may be exposed in using, handling, packaging, transporting, or disposing of hazardous materials;

(ii) Obtain medical treatment for those affected by the material; and

(iii) Have others use, duplicate, and disclose the data for the Government for these purposes.

(2) To use, duplicate, and disclose data furnished under this clause, in accordance with subparagraph (h)(1) of this clause, in precedence over any other clause of this contract providing for rights in data.

(3) The Government is not precluded from using similar or identical data acquired from other sources.

252.223-7001 Hazard Warning Labels (DEC 1991) - DFARS

(a) "Hazardous material," as used in this clause, is defined in the Hazardous Material Identification and Material Safety Data clause of this contract.

(b) The Contractor shall label the item package (unit container) of any hazardous material to be delivered under this contract in accordance with the Hazard Communication Standard (29 CFR 1910.1200 et seq). The Standard requires that the hazard warning label conform to the requirements of the standard unless the material is otherwise subject to the labelling requirements of one of the following statutes:

(1) Federal Insecticide, Fungicide and Rodenticide Act;

(2) Federal Food, Drug and Cosmetics Act;

(3) Consumer Product Safety Act;

(4) Federal Hazardous Substances Act; or

(5) Federal Alcohol Administration Act.

(c) The Offeror shall list which hazardous material listed in the Hazardous Material Identification and Material Safety Data clause of this contract will be labeled in accordance with one of the Acts in paragraphs (b)(1) through (5) of this clause instead of the Hazard Communication Standard. Any hazardous material not listed will be interpreted to mean that a label is required in accordance with the Hazard Communication Standard.

	MATERIAL (If None, Insert “None.”)			ACT	

(d) The apparently successful Offeror agrees to submit, before award, a copy of the hazard warning label for all hazardous materials not listed in paragraph (c) of this clause. The Offeror shall submit the label with the Material Safety Data Sheet being furnished under the Hazardous Material Identification and Material Safety Data clause of this contract.

(e) The Contractor shall also comply with MIL-STD-129, marking for shipment and storage (including revisions adopted during the term of this contract).

252.211-7006 Radio Frequency Identification (FEB 2007)

(a) *Definitions*. As used in this clause—

“Advance shipment notice” means an electronic notification used to list the contents of a shipment of goods as well as additional information relating to the shipment, such as order information, product description, physical characteristics, type of packaging, marking, carrier information, and configuration of goods within the transportation equipment.

“Bulk commodities” means the following commodities, when shipped in rail tank cars, tanker trucks, trailers, other bulk wheeled conveyances, or pipelines:

(1) Sand.

(2) Gravel.

(3) Bulk liquids (water, chemicals, or petroleum products).

(4) Ready-mix concrete or similar construction materials.

(5) Coal or combustibles such as firewood.

(6) Agricultural products such as seeds, grains, or animal feed.

"Case" means either a MIL-STD-129 defined exterior container within a palletized unit load or a MIL-STD-129 defined individual shipping container.

"Electronic Product Code™ (EPC)" means an identification scheme for universally identifying physical objects via RFID tags and other means. The standardized EPC data consists of an EPC (or EPC identifier) that uniquely identifies an individual object, as well as an optional filter value when judged to be necessary to enable effective and efficient reading of the EPC tags. In addition to this standardized data, certain classes of EPC tags will allow user-defined data. The EPC tag data standards will define the length and position of this data, without defining its content.

"EPCglobal™" means a joint venture between EAN International and the Uniform Code Council to establish and support the EPC network as the global standard for immediate, automatic, and accurate identification of any item in the supply chain of any company, in any industry, anywhere in the world.

"Exterior container" means a MIL-STD-129 defined container, bundle, or assembly that is sufficient by reason of material, design, and construction to protect unit packs and intermediate containers and their contents during shipment and storage. It can be a unit pack or a container with a combination of unit packs or intermediate containers. An exterior container may or may not be used as a shipping container.

"Palletized unit load" means a MIL-STD-129 defined quantity of items, packed or unpacked, arranged on a pallet in a specified manner and secured, strapped, or fastened on the pallet so that the whole palletized load is handled as a single unit. A palletized or skidded load is not considered to be a shipping container. A loaded 463L System pallet is not considered to be a palletized unit load. Refer to the Defense Transportation Regulation, DoD 4500.9-R, Part II, Chapter 203, for marking of 463L System pallets.

"Passive RFID tag" means a tag that reflects energy from the reader/interrogator or that receives and temporarily stores a small amount of energy from the reader/interrogator signal in order to generate the tag response.

(1) Until February 28, 2007, the acceptable tags are—

(i) EPC Class 0 passive RFID tags that meet the EPCglobal Class 0 specification; and

(ii) EPC Class 1 passive RFID tags that meet the EPCglobal Class 1 specification. This includes both the Generation 1 and Generation 2 Class 1 specifications.

(2) Beginning March 1, 2007, the only acceptable tags are EPC Class 1 passive RFID tags that meet the EPCglobal Class 1 Generation 2 specification. Class 0 and Class 1 Generation 1 tags will no longer be accepted after February 28, 2007.

"Radio Frequency Identification (RFID)" means an automatic identification and data capture technology comprising one or more reader/interrogators and one or more radio frequency transponders in which data transfer is achieved by means of suitably modulated inductive or radiating electromagnetic carriers.

"Shipping container" means a MIL-STD-129 defined exterior container that meets carrier regulations and is of sufficient strength, by reason of material, design, and construction, to be shipped safely without further packing (e.g., wooden boxes or crates, fiber and metal drums, and corrugated and solid fiberboard boxes).

(b)(1) Except as provided in paragraph (b)(2) of this clause, the Contractor shall affix passive RFID tags, at the case and palletized unit load packaging levels, for shipments of items that—

(i) Are in any of the following classes of supply, as defined in DoD 4140.1-R, DoD Supply Chain Materiel Management Regulation, AP1.1.11:

(A) Subclass of Class I – Packaged operational rations.

(B) Class II – Clothing, individual equipment, tentage, organizational tool kits, hand tools, and administrative and housekeeping supplies and equipment.

(C) Class IIIP – Packaged petroleum, lubricants, oils, preservatives, chemicals, and additives.

(D) Class IV – Construction and barrier materials.

(E) Class VI – Personal demand items (non-military sales items).

(F) Subclass of Class VIII – Medical materials (excluding pharmaceuticals, biologicals, and reagents – suppliers should limit the mixing of excluded and non-excluded materials).

(G) Class IX – Repair parts and components including kits, assemblies and subassemblies, reparable and consumable items required for maintenance support of all equipment, excluding medical-peculiar repair parts; and

(ii) Are being shipped to any of the following locations:

(A) Defense Distribution Depot, Susquehanna, PA: DoDAAC W25G1U or SW3124.

(B) Defense Distribution Depot, San Joaquin, CA: DoDAAC W62G2T or SW3224.

(C) Defense Distribution Depot, Albany, GA: DoDAAC SW3121.

(D) Defense Distribution Depot, Anniston, AL: DoDAAC W31G1Z or SW3120.

(E) Defense Distribution Depot, Barstow, CA: DoDAAC SW3215.

(F) Defense Distribution Depot, Cherry Point, NC: DoDAAC SW3113.

(G) Defense Distribution Depot, Columbus, OH: DoDAAC SW0700.

(H) Defense Distribution Depot, Corpus Christi, TX: DoDAAC W45H08 or SW3222.

(I) Defense Distribution Depot, Hill, UT: DoDAAC SW3210.

(J) Defense Distribution Depot, Jacksonville, FL: DoDAAC SW3122.

(K) Defense Distribution Depot, Oklahoma City, OK: DoDAAC SW3211.

(L) Defense Distribution Depot, Norfolk, VA: DoDAAC SW3117.

(M) Defense Distribution Depot, Puget Sound, WA: DoDAAC SW3216.

(N) Defense Distribution Depot, Red River, TX: DoDAAC W45G19 or SW3227.

(O) Defense Distribution Depot, Richmond, VA: DoDAAC SW0400.

(P) Defense Distribution Depot, San Diego, CA: DoDAAC SW3218.

(Q) Defense Distribution Depot, Tobyhanna, PA: DoDAAC W25G1W or SW3114.

(R) Defense Distribution Depot, Warner Robins, GA: DoDAAC SW3119.

(S) Air Mobility Command Terminal, Charleston Air Force Base, Charleston, SC: Air Terminal Identifier Code CHS.

(T) Air Mobility Command Terminal, Naval Air Station, Norfolk, VA: Air Terminal Identifier Code NGU.

(U) Air Mobility Command Terminal, Travis Air Force Base, Fairfield, CA: Air Terminal Identifier Code SUU.

(V) A location outside the contiguous United States when the shipment has been assigned Transportation Priority 1.

(2) The following are excluded from the requirements of paragraph (b)(1) of this clause:

(i) Shipments of bulk commodities.

(ii) Shipments to locations other than Defense Distribution Depots when the contract includes the clause at FAR 52.213-1, Fast Payment Procedures.

(c) The Contractor shall—

(1) Ensure that the data encoded on each passive RFID tag are unique (i.e., the binary number is never repeated on any and all contracts) and conforms to the requirements in paragraph (d) of this clause;

(2) Use passive tags that are readable; and

(3) Ensure that the passive tag is affixed at the appropriate location on the specific level of packaging, in accordance with MIL-STD-129 (Section 4.9.2) tag placement specifications.

(d) *Data syntax and standards*. The Contractor shall encode an approved RFID tag using the instructions provided in the EPC™ Tag Data Standards in effect at the time of contract award. The EPC™ Tag Data Standards are available at http://www.epcglobalinc.org/standards/.

(1) If the Contractor is an EPCglobal™ subscriber and possesses a unique EPC™ company prefix, the Contractor may use any of the identity types and encoding instructions described in the most recent EPC™ Tag Data Standards document to encode tags.

(2) If the Contractor chooses to employ the DoD Identity Type, the Contractor shall use its previously assigned Commercial and Government Entity (CAGE) Code and shall encode the tags in accordance with the tag identity type details located at http://www.acq.osd.mil/log/rfid/tag_data.htm. If the Contractor uses a third party packaging house to encode its tags, the CAGE code of the third party packaging house is acceptable.

(3) Regardless of the selected encoding scheme, the Contractor is responsible for ensuring that each tag contains a globally unique identifier.

(e) *Receiving report*. The Contractor shall electronically submit advance shipment notice(s) with the RFID tag identification (specified in paragraph (d) of this clause) in advance of the shipment in accordance with the procedures at http://www.acq.osd.mil/log/rfid/advance_shipment_ntc.htm.

52.247-9012 Requirements for Treatment of Wood Packaging Material (WPM) (FEB 2007) DLAD

(a) This clause only applies when wood packaging material (wpm) will be used to make shipments under this contract and/or when wpm is being acquired under this contract.
(b) Definition. Wood packaging material (WPM) means wood pallets, skids, load boards, pallet collars, wooden boxes, reels, dunnage, crates, frame and cleats. The definition excludes materials that have undergone a manufacturing process, such as corrugated fiberboard, plywood, particleboard, veneer, and oriented strand board (OSD).
(c) All Wood Packaging Material (WPM) used to make shipments under DOD contracts and/or acquired by DOD must meet requirements of International Standards for Phytosanitary Measures (ISPM) 15, 'Guidelines for Regulating Wood Packaging Materials in International Trade.' DOD shipments inside and outside of the United States must meet ISPM 15 whenever WPM is used to ship DOD cargo.
(1) All WPM shall comply with the official quality control program for heat treatment (HT) or kiln dried heat treatment (KD HT) in accordance with American Lumber Standard Committee, Incorporated (ALSC) Wood Packaging Material Program and WPM Enforcement Regulations (see http://www.alsc.org/).
(2) All WPM shall include certification/quality markings in accordance with the ALSC standard. Markings shall be placed in an unobstructed area that will be readily visible to inspectors. Pallet markings shall be applied to the stringer or block on diagonally opposite sides of the pallet and be contrasting and clearly visible. All containers shall be marked on a side other than the top or bottom, contrasting and clearly visible. All dunnage used in configuring and/or securing the load shall also comply with ISPM 15 and be marked with an ASLC approved DUNNAGE stamp.
(d) Failure to comply with the requirements of this restriction may result in refusal, destruction, or treatment of materials at the point of entry. The Agency reserves the right to recoup from the Contractor any remediation costs incurred by the Government.

End of clauses for Section D.

Active Radio Frequency Identification (aRFID) Tag Requirements for OCONUS Shipments

The contractor shall prepare and affix RF Tags to shipment containers, for all OCONUS shipments, and special CONUS training exercises as directed, in accordance with the following RADIO FREQUENCY (RF) TAG REQUIREMENTS:

I. DEFINITIONS

A. Radio Frequency (RF) TAG: A small radio transceiver that can store user defined data in nonvolatile, read/write memory, and can be monitored and controlled by other devices. Radio Frequency Identification tags may be "active " which contain their own power source or "passive" which receive their power from an interrogator by radio frequency (RF) transmission

B. aRFID INTERROGATOR: Electronic device used to detect, "read" and "write" specific information on a RF tag

C. aRFID RETRIEVER COMPUTER: An industrial computer configured to receive signals, via data cable from the aRFID Interrogator, and "upload" aRFID Tag information via a phone line/network connection to destination server. It has no monitor or keyboard.

D. aRFID LAPTOP WRITE STATION COMPUTER: A "laptop" computer configured to "write" tags in conjunction with an aRFID Interrogator.

E. aRFID WRITE SOFTWARE: The Government-owned software used in conjunction with aRFID equipment to gather aRFID tag data on military-sponsored shipments and report information for compilation in Government databases on regional servers for In-Transit Visibility.

F. TAG DOCKING STATION: An electronic device used to transmit data electronically from the laptop computer to the aRFID tag.

II. GENERAL INFORMATION

A. It is the objective of the Government to use aRFID Technology for all Class I (Food) containers going OCONUS in order to maintain Total Asset Visibility (TAV) of subsistence on the battlefield. The Army has incorporated RFID Technology into its Joint Vision 2010 Focused Logistics Program.

The aRFID application software to be used for aRFID tagging of OCONUS shipments is Government-owned. The Government shall provide the RF Write software and technical services required to facilitate implementation of RF tagging of shipments. This includes surveying the Contractor/Supplier (hereinafter the "Contractor") site for RF site preparation, installation and testing of hardware and software, installation of communications software interfaces to Government servers, and training vendor personnel to use the integrated software and hardware composing the RF tag "write" and "read" capabilities. The Government points of contact (POC) for acquiring the aRFID software and technical services are: Program Executive Office, Enterprise Information Systems, Product Manager for Automatic Identification Technology (PEO EIS, PM AIT), help.rfitv@us.army.mil or Phone number: (800) 877-7925 or (703) 439-3850.

III. RF EQUIPMENT AND EQUIPMENT SUPPORT

A. HARDWARE:

All aRFID equipment will be Government-Furnished Property (GFP). The Contractor shall contact and coordinate with the Government POCs for the delivery, installation and configuration of the RF Computers and RF Interrogator units, for initial inventory of RF tags, and for any other assistance or advice required.

Note: FAR clause 52.245-4, Government Furnished Property (Short Form) shall apply to all GFP provided to the Contractor.

1. aRFID Retriever Computer:

Each Contractor will be supplied with one (1) aRFID Retriever Computer. The computer will have aRFID read software installed and has no keyboard and no monitor. It will automatically receive data from the RF interrogator and forward it to a regional server using a telephone line (toll-free number) to be provided by the Contractor.

2. aRFID Laptop Write Station:

Each Contractor will be supplied with one (1) aRFID laptop computer configured with RF Write software. Connected with a RF Interrogator or a Tag Docking Station, this unit enables the Contractor to write shipment information to RF tags, and to up-load the written tag data to a regional server using a telephone line (toll-free number) to be provided by the Contractor.

3. aRFID Interrogators:

Each Contractor will be supplied with aRFID Interrogators required for visibility of shipments as they enter and leave the contractor facility. The number of interrogators required will be determined during the site survey. The contractor may also be supplied with an aRFID interrogator for the aRFID laptop write station unless an aRFID tag docking station is utilized to write the tags.

4. aRFID Tags:

The aRFID Tag model include ST 654/656 “active” tag with its own database engine and file system. It features 128 bytes of read/write memory and supports tag-initiated communication triggered by system sensors. It is hermetically sealed, waterproof, and able to withstand the shock and vibration of transportation. One (1) aRFID Tag model ST-656-1 is required for each container shipment. The initial inventory of aRFID Tags shall be provided by the Government for use on Government-sponsored shipments.

B. SOFTWARE:

The Government will furnish all application software, and perform all actions required to install and test software, and then train Contractor personnel to use software and equipment to perform required aRFID tag activities.

C. aRFID INFRASTRUCTURE SUPPORT:

1. The Government shall coordinate and conduct a site survey of the vendor facility for installation of the RF equipment. The Contractor shall provide and prepare physical locations for aRFID equipment in accordance with the site survey.

2. The Contractor will provide the following infrastructure for the aRFID interrogator "read" station:

a. Mounting of a (GFP) bracket plate to support the aRFID Interrogator. The Government shall provide the bracket to the Contractor as GFE.
b. Installation of an un-switched 110VAC or 220VAC (as required) receptacle within two feet of the interrogator mount.
c. Installation of conduit or pathway for running of a data cable between the aRFID Interrogator and the aRFID Retriever Computer.
d. Shelf space for the aRFID Retriever Computer and installation of an un-switched 110VAC or 220VAC receptacle within two feet.
e. Installation of a telephone line near the aRFID Retriever Computer capable of dialing a toll-free number.

3. The Contractor will provide the following infrastructure for the aRFID laptop write station:

a. Shelf space with a 110VAC receptacle within two feet of the aRFID laptop write station location.
b. A telephone line near the aRFID laptop write station capable of dialing a toll-free number. The telephone line can be the same telephone line as installed in paragraph 2.e above.

4. The Government shall install and test aRFID equipment after the supplier has completed site preparation work. The vendor shall provide assistance to the equipment installation team to facilitate installation and testing and to insure access to aRFID equipment locations.

IV. PROCEDURES

A. Each Contractor shall input data, or "write", one aRFID tag for each OCONUS container load, or CONUS container when directed by the DLA, TROOP SUPPORT/E Item Manager, and affix the aRFID tag to the Container by the most secure method available, behind the locking bars. Each aRFID tag shall be written to contain the data attached, formatted as specified by the data definition for the 128k aRFID tag. The Government will provide training for contractor personnel to "write" the data to tags, and to "read" and upload tag data upon shipment container departure from contractor location. The data format is in the Operational Prototype Total Asset Visibility, TIPS-Write Import Document, 09 Sep 02, at attachment 1.

B. The Contractor shall be responsible for replenishing and maintaining its inventory of aRFID tags. The replenishment RF tags will be provided as Government furnished property (GFP), at no cost to the Contractor. Note however, that the Contractor shall be fully liable for any/all loss or damage of aRFID Tags in their possession. The Contractor shall obtain its replenishment RF Tags from the Defense Distribution Center for aRFID Tags:

Defense Distribution Center

Bldg 54, Bay D-5 (J4/5)

New Cumberland, PA 17070

EMAIL: delivery@dla.mil

Telephone: 1-800-456-5507

Please put in the subject line of the email: aRFID TAG REPLENISHMENT REQUEST

OCONUS Contractors shall remove all aRFID Tags affixed to containers delivered from CONUS origin, and retain for re-use. When the RF tag is removed from the container, the contractor shall invert the battery to deactivate the tag until it is ready for re-use. The removed/retained Tag(s) should be reported on the Monthly aRFID Tag Inventory Log described in para. D below. Quantities of aRFID tags over the amount needed for normal operations will be stored until collected by field service engineers during regular aRFID maintenance visits.

C. Maintenance of GFP Hardware/Software: The Contractor shall promptly and directly contact the following for any maintenance/repair required for any aRFID Tag GFP hardware or software:

CONUS/OCONUS: help.rfitv@us.army.mil or Phone number: (800) 877-7925 or (703) 439-3850.

D. The Contractor shall maintain a log for its inventory/use of aRFID Tags. The aRFID Tag Inventory Log shall, at a minimum, contain the following information and dates: initial inventory; detail of each aRFID Tag shipped (e.g. aRFID Tag serial #, container #, TCN, date shipped, destination); detail of any aRFID Tag returned to the RFID Mgmt Center; replenishment quantity, on-hand inventory. In addition note any aRFID Tags that are damaged or unserviceable. OCONUS Contractors shall include and detail aRFID Tags removed/retained from CONUS containers (e.g. aRFID Tag serial #, container #, TCN, origin,). This information shall be promptly provided by the Contractor on a monthly basis (the first week of each month) to the Contracting Officer or authorized Contracting Officer's Representative (COR), Program Executive Office, Enterprise Information Systems, Product Manager for Automatic Identification Technology (PEO EIS, PM AIT), help.rfitv@us.army.mil or Phone number: (800) 877-7925 or (703) 439-3850.

E. Upon request of the Contracting Officer, or COR, the Contractor shall promptly return any, or all, GFP RF Tags to the DDC RFID Management Center above. The Contractor shall prepare aRFID Tags for shipment as directed by the Government POCs, and shall make such shipment to the Defense Distribution Center at its own expense. The Government will not make payment for any return shipments.

1 Reference: Operational Prototype Total Asset Visibility, TIPS-Write Import Document, 09 Sep 02.

PART II - TECHNICAL DATA FOR CONTRACTOR FURNISHED MATERIAL (CFM) COMPONENTS

SUB-PART A. PACKAGING, LABELING, PACKING, UNITIZATION, MARKING AND REQUIREMENTS FOR CFM COMPONENTS PACKAGED IN ACCORDANCE WITH ACQUISITION DOCUMENTS OTHER THAN MIL-PRF-44073.

D-1 PACKAGING

Individual component packaging requirements are found in the component's prime documents.

For PCR (Performance-based Contract Requirements and Product Contract Requirements)
For MIL-PRF-32176 Bag, Hot Beverage Bag
For MIL-R-44398/ Packaging Requirements and Quality Assurance Provisions
Ration Supplement, Flameless Ration Heater (FRH)
For Commercial Item Description/Packaging Requirements and Quality Assurance Provisions

D-2 LABELING:

In addition to individual component labeling requirements, all components shall be labeled in accordance with all applicable FDA and USDA requirements, including 'NUTRITION FACTS' labeling in accordance with the Nutrition Labeling And Education Act (NLEA).

When the unit packager/assembler is overwrapping commercially wrapped and labeled product that meets the requirements of the NLEA, it will only be necessary to apply product name and date of pack to the overwrapped pouch.

For PCR (Performance-based Contract Requirements and Product Contract Requirements) in accordance with D-1 Packaging.
For MIL-PRF-32176 Bag, Hot Beverage Bag
For MIL-R-44398/ Packaging Requirements and Quality Assurance Provisions Ration Supplement, Flameless Ration Heater (FRH)
For Commercial Item Description/Packaging Requirements and Quality Assurance Provisions in accordance

D-3 PACKING:

It shall be the responsibility of the Assembly Contractor to ensure that CFM product shipped to a unit packager and/or to the assembly point is packed in accordance with paragraph 5.1.4.2 of ASTM D 3951 to assure product compliance with applicable end item requirements.

D-4 UNITIZATION:

UNITIZATION: In accordance with paragraph 5.1.5 of **ASTM D 3951** "*Standard Practice for Commercial Packaging*."

ALTERNATIVE PACKING FOR SHIPMENT TO RATION ASSEMBLER

When the product processing plant and the ration assembler are located in close proximity to each other, and alternative method of packing that utilizes reusable containers or totes and is mutually suited to both plant operations, may be submitted to the contracting officer for determination of adequacy and approval for use. Proposals shall include a proposed system of marking and unitization for maintenance of lot from processor to assembler.

D-5 MARKING:

Marking of CFM product shipping containers shipped to a unit packager and/or to the assembly point shall be in accordance with paragraph 5.1.6.2 of ASTM D 3951 provided that a production

lot number that indicates the production date of the contents is included. The lot number on the shipping container may be in the clear', a Julian date code, or such other code as must be explained in a letter to the Contracting Officer and to the applicable inspection personnel.

SUB-PART B. PACKAGING, LABELING, PACKING, UNITIZATION, AND MARKING REQUIREMENTS FOR CFM COMPONENTS PACKAGED IN ACCORDANCE WITH MIL-PRF-44073.

D-1 PACKAGING

Product shall be filled into pouches, processed and each pouch placed into a carton in accordance with MIL-PRF-44073, Packaging of Food in Flexible Pouches, Type I.

D-2 LABELING

A. Pouches. Each pouch shall be correctly and legibly labeled. Printing ink shall be permanent black ink or any other contrasting color, which is free of carcinogenic elements. Prior to thermal processing of the pouches, the product name, lot number and filling equipment number shall be applied. All other marking may be applied before or after thermal processing.

(1) Product name (not less than 1/8 inch high). Commonly used abbreviations may be used.
(2) Pouch code includes: 1/
Lot Number
Filling equipment identification number
Official inspection legend
Retort identification number and Retort cook number (Optional)

Time stamp (hour and minute of filling/sealing operation)

1/ The lot number shall be expressed as a four digit Julian code. The first digit shall indicate the year of production and the next three digits shall indicate the day of the year (Example, 14 February 2010 would be coded as 0045). The Julian code shall represent the day the product was packaged into the pouch and processed. Following the four digit Julian code, the other required code information shall be printed in the sequence as listed above.

B. Cartons

(1) The cartons shall be clearly printed on one of the largest panels with permanent black ink as follows:

Product name (7/32 to 9/32 inch block letters)
Ingredients
Net weight
Name and address of packer
Code (same as pouch code, see pouches) 1/ 2/ 3/
USDA official inspection legend for the packer's plant and all applicable USDA regulations
"Nutrition Facts" label in accordance with the Nutrition Labeling and Education Act (NLEA)

1/ Code may be ink printed on any outside carton panel. Code may be embossed on any outside carton panel except the largest panels of the carton.

2/ Official establishment number not required in carton code.

3/ Cartons shall be time stamped with the hour and minute that the pouch is sealed into the carton. (Cartons are not expected to bear same time stamp as pouch). Alternatively, the optional Retort identification number and Retort cook number shall be used.

(2) Military nutrition information entitled "Military Rations Are Good Performance

(3) The product shall be formulated and labeled in accordance with all USDA labeling regulations and policies.

D-3 PACKING

A. Packing. Not more than 40 pounds of product shall be packed in a fiberboard shipping box constructed in accordance with style RSC of ASTM D 5118/5118M, Standard Practice for Fabrication of Fiberboard Shipping Boxes. The fiberboard shall conform to type CF, class D, variety SW, grade 200 of ASTM D 4727/D 4727M, Standard Specification for Corrugated and Solid Fiberboard Sheet Stock (Container Grade) and Cut Shapes. Each box shall be closed in accordance with ASTM D 1974, Standard Practice for Methods of Closing, Sealing, and Reinforcing Fiberboard Boxes.

D-4 UNITIZATION

UNITIZATION: In accordance with paragraph 5.1.5 of **ASTM D 3951** "*Standard Practice for Commercial Packaging*."

ALTERNATIVE PACKING FOR SHIPMENT TO RATION ASSEMBLER

When the product processing plant and the ration assembler are located in close proximity to each other, and alternative method of packing that utilizes reusable containers or totes and is mutually suited to both plant operations, may be submitted to the contracting officer for determination of adequacy and approval for use. Proposals shall include a proposed system of marking and unitization for maintenance of lot from processor to assembler.

D-5 MARKING

A. Shipping containers. Shipping containers shall be marked in accordance with DLA Troop Support FORM 3556, Marking Instructions for Boxes, Sacks, and Unit Loads of Perishable and Semiperishable Subsistence.

SECTION E – INSPECTION AND ACCEPTANCE

NOTE: FAR Clauses 52.246-2 and 52.246-11 are applicable to this solicitation/contract and shall be cited to properly enforce the Higher Level Contract Quality requirements.

NOTE: In addition to any inspection requirements cited in contract and/or prime documents, for thermally processed entrees, starches and soups, and fruits, inspection for packaging, labeling and packing, and marking shall be in accordance with the Quality Assurance Provisions and Packaging Requirements for MIL-PRF-44073 and the quality assurance provisions contained in Section E of this solicitation.

NOTE: The Quality Assurance Provisions found in Section E of this solicitation and in Sections E and the Quality Assurance Provisions and Packaging Requirements for component Prime Documents cited in this solicitation are required for contractor, Army Veterinary, and USDA inspection, unless otherwise specified by this solicitation/contract. The Analytical Requirements found in Commercial Item Descriptions cited as Prime Documents by this solicitation are required for contractor, Army Veterinary, and USDA inspection, unless otherwise specified by this solicitation/contract. When Quality Assurance Provisions and Packaging Requirements cite analytical content levels different from those cited in the Commercial Item Description, use those analytical content levels cited int the Quality Assurance Provisions and Packaging Requirements.

NOTE: The following clauses are incorporated by reference:
52.246-16 Responsibility for Supplies (APR 1984)
52.246-9018 Shipping Documents Supplied To Assembly Contractors (APR 2008) DLAD
52.246-9019 Material and Inspection Report (APR 2008) DLAD

Saving and reserving all rights under the general inspection requirements of DLAD Clause 52.246-9023, the procedures for inspection and acceptance will be as follows:

E-1. Quality Assurance Requirements for Ration Component Production Plants and Ration Sub Assembly and Assembly Plants.

E-1-A. Higher Level Quality Requirements - Documented Quality Systems Plan (QSP)

The contractor shall model the documented QSP after ISO/ANSI/ASQC Q9001, a system that meets other recognized industry quality standards, or a process control system that is equivalent to or better than ISO/ANSI/ASQC Q9001. The contractor shall identify the quality standard used to model their QSP. If the contractor proposes an alternate (i.e., non-standard) process control system, this shall be clearly stated in the QSP. Some contractors may have third party certification of their quality system, which the private sector devised to administer the ISO series standards. However, third party certification by any third parties, to include Government certifications, is not required. Whether or not contractors want to use third party certification is completely optional on their part. Although certification information may be provided as documentation and evidence to support the system proposed by the contractor, third party certification/ registration documentation is not a substitute for

government quality assurance with regard to components used in the operational ration programs. Regardless of the standard or non-standard document used to model the documented QSP, the documented QSP shall address, at a minimum, the following elements (within each section of the element the contractor shall provide the information and address the questions, as applicable, listed in Supplier Support Quality Systems Audit Workbook I: Documented QSP Evaluation Guideline):

QSP General Outline

I. MANAGEMENT RESPONSIBILITY AND QUALITY SYSTEM DESIGN
II. TRAINING
III. DOCUMENT AND DATA CONTROL AND CONTROL OF QUALITY RECORDS
IV. CONTROL OF INSPECTION, MEASURING, AND TEST EQUIPMENT (IAW ANSI/NCSL Z540-1 or ISO 10012-1)
V. CONTROL AND PROTECTION OF PRODUCT
1. Handling, Storage, Packaging, Preservation, and Delivery Program
2. Product Identification and Traceability Program
3. Inspection and Test Status and Records
4. Control of Nonconforming Product

VI. CONTRACT REVIEW, PURCHASING AND CONTROL OF CUSTOMER-SUPPLIED PRODUCT (Government-furnished material)
VII. RECEIPT INSPECTION AND TESTING
VIII. IN-PROCESS AND PROCESS INSPECTION AND TESTING:
1. Manufacturing Process Controls Techniques (DLAD MPC Clause)
2. Statistical Process Control Techniques (SPC QAP)

IX. REGULATORY CONTROLS
1. General Regulatory Requirements (as applicable to the plant USDA-FSIS, FDA, GMP, HACCP, SSOP, USDA-Dairy, etc.).
2. Integrated Pest Management and Sanitation Programs

X. END ITEM INSPECTION AND TESTING (IAW product/material specifications/documents and ANSI/ASQC Z1.4)
XI. INTERNAL AUDITS
XII. CORRECTIVE AND PREVENTIVE ACTION PROGRAM
XIII. IMPROVEMENT

NOTE: Integrated Pest Management Plan: The IPM Plan is not required to be submitted but the questions concerning the facility's IPM in Section IX Regulatory Controls, Area 2, of the QSP must be addressed.

The documented QSP will be evaluated by the Quality System Audit Team (composed of DLA Troop Support - FTSB, USDA-AMS, and VETCOM's Quality Systems Auditors), USDA-AMS/VETCOM Operational Rations Program Coordinators, and the Government In-Plant Quality Assurance Representatives (QAR) assigned to perform Government QA functions at contractors' facilities. Government personnel will use the Supplier Support Quality Systems Audit Workbook I: Documented QSP Evaluation Guideline (in conjunction with the standard or other document identified in the contractor's QSP) as the basic framework against which they will evaluate QSPs. Workbook I was developed to standardize the evaluations of documented QSPs (developed using ISO/ANSI/ASQC

Q9001, other recognized industry quality standards, or a non-standard contractor's specific process control system) submitted by contractors for the purpose of demonstrating their capability to meet the higher-level contract quality requirements using any of the aforementioned documents and for the contracting officer to assess a contractor's capability to meet the contract requirements.

NOTE: Although Government inspection personnel (USDA-AMS/U.S. Army Verterinary Services) are required to evaluate the contractors' QSPs, the QSP rating will be determined and assigned by DLA Troop Support - FTSB's Quality Systems Auditors.

Offerors/Contractors can request a copy of Workbook I by contacting the applicable contracting officer or DLA Troop Support - FTSB. Workbook I is also available online in PDF format at the following website http://www.dscp.dla.mil/subs/support/quality/QSP.pdf. DLA Troop Support will recognize a contractor's quality system whenever it meets the contract requirements, whether the quality system is modeled on military, commercial, national or international quality systems standards. The design and implementation of a QSP will be influenced by the varying needs of a company, its particular goals and objectives, the products produced, and the processes and specific practices employed in the operation. The intent of the requirement is for contractors to improve process capability, process control which, when used effectively, can result in a prevention-oriented approach rather than a detection approach that will improve product quality and lower cost through the use of a single quality system in any contractor facility.

A documented QSP is required when a contract references or requires a contractor to perform under the higher-level contract quality requirements. Contractors are responsible for complying with the quality system requirements set forth in their documented QSP in addition to all detailed requirements cited in the contract and for furnishing products that meet all requirements of the contract. Contractors are required to establish, document, submit for Government review, and maintain a quality system as a means of ensuring that product conforms to the requirements of the contract. The documented QSP shall include the quality system procedures and outline the structure of the documentation used in the quality system. When the requirements of the Statistical Process Control Quality Assurances Provision (SPC QAP) and/or the DLAD MPC Clause 52-246-9001 Manufacturing Process Controls and In-Process Inspection are applicable, these requirements must be addressed under the In-Process and Process Inspection and Testing section of the documented QSP. Redundant areas/requirements (cited in the MPC Clause or the SPC QAP) need only be addressed once in the QSP. The calibration of measuring and testing equipment shall, as a minimum, adhere to the requirements of ANSI/NCSL Z540-1 or ISO 10012-1.

The Higher Level Contract Quality Requirements, Manufacturing Process Controls (MPC) Clause 52.246-9001, and Statistical Process Controls Quality Assurance Provision (SPC QAP) apply to all CFM and GFM food components and Sub Assembly and Assembly Operations, except as indicated below:

A. The following items are exempt from the Higher Level Contract Quality Requirements, MPC IAW Clause 52.246-9001 and the SPC QAP (No QSP required):

1. Accessory package components
2. Condiments (even if packaged in laminated barrier pouches) - Hot sauce, Ketchup, Mayonnaise, Picante Sauce, etc.

3. Bulk packed items: Sports bars; beef snacks; cereal treats; chocolate sports bar; ranger bar; First Strike bars; chow mein noodles; fruit bars (CID AA-20212); granola bars; osmotic fruit; cookies (CID AA - 20295, PCR-C-031, PCR-C-046); almonds, roasted; peanuts, roasted; snacks (CID AA-20195); and commercial sandwich crackers/cookies.and bulk packed items procured using the commercial components solicitation (e.g., candies).
NOTE: Bulk packed, as used in this paragraph, means packing prior to finished product packaging. However, note that this does not prohibit the prime contractor from requiring a QSP from their subcontractors for all products on their own accord.

B. **A QSP is required** but **SPC techniques are optional** for the following items: Beverage bases, cheese spreads, cookies (CID AA - 20295, PCR-C-031, PCR-C-046), dairy component powders (cocoa beverages, dairy shakes, flavored coffees, non-dairy creamer, etc), nut raisin mixes, peanut butter, peanut spread, jellies/jams/preserves, and bulked-packed items that are individually packaged by an assembler/packer in military packaging (laminated barrier pouches). However, note that this does not prohibit the prime contractor from requiring SPC techniques from their subcontractors for all products on their own accord.

NOTE: TO THE EXTENT OF ANY INCONSISTENCY BETWEEN THE CONTRACT OR ITS GENERAL PROVISIONS AND A CONTRACTOR'S QSP AND OR IMPLEMENTED QUALITY SYSTEM, THE CONTRACT AND THE GENERAL PROVISIONS SHALL CONTROL.

The QSP shall be submitted to DLA Troop Support - FTSB, through the Contracting Officer, for review no later than at time of bid submittal to determine if the QSP meets the acquisition needs. The QSP shall be DOCUMENTED, DATED, AND SIGNED BY A RESPONSIBLE COMPANY OFFICIAL and WILL BE DISTRIBUTED UNDER COMPANY LETTERHEAD TO THE ADDRESSEES BELOW:

A. ONE COPY SHALL BE MAILED **(AT TIME OF BID SUBMITTAL)** TO:

DLA TROOP SUPPORT
ATTN: DLA Troop Support - FTSB (Quality Systems Audit Team or Applicable Contracting Officer)
700 ROBBINS AVE., BLDG 6
PHILADELPHIA, PA 19111-5092

(NOTE: It is important for BLDG. 6 to be included in the address above for timely delivery, especially for express deliveries.)

B. **AFTER CONTRACT AWARD** ONE COPY SHALL BE MAILED **PRIOR TO THE INITIATION OF PRODUCTION** TO EACH OF THE **FOLLOWING** GOVERNMENT INSPECTION OFFICES as applicable:

1. **USDA-AMS OFFICES:** When USDA-AMS is responsible for performing Government source inspection at a ration facility one copy shall be mailed to each of the following USDA-AMS offices:

a. **HEAD, DEFENSE CONTRACT INSPECTION SECTION**
USDA,AMS,FFV,PPB **(202) 720-5021**
ATTN: Richard Boyd/Donna McCarter
1400 INDEPENDENCE AVE. SW
STOP 0247, ROOM 0726, SOUTH BLDG.
WASHINGTON, DC 20250-0247

b. **USDA-DCIS OPERATIONAL RATIONS PROGRAM COORDINATOR**
USDA, AMS, FV, PPB **(630) 790-6957**
800 ROOSEVELT ROAD
BLDG A, SUITE 380
GLEN ELLYN, IL 60137-7688

c. **USDA-AMS INSPECTION AREA OFFICE:** The contractor/subcontractor shall contact USDA-DCIS for the applicable area office address (Weslaco, TX, East Point, GA, North Brunswick, NJ, South Bend, IN, Richmond, VA, etc).

2. **US ARMY VETERINARY COMMAND (VETCOM):** When Army Veterinary inspectors (AVIs) are responsible for performing Government source inspection at operational rations assembly plants, one copy shall be personally delivered to the resident AVI/QAR prior to the initiation of production/assembly. The contractor/subcontractor shall contact VETCOM for questions regarding AVI's inspection services.

COMMANDER
U.S. ARMY VETERINARY COMMAND (MCVSF-OPERATIONAL
RATIONS SECTION – MRE Program Coordinator)
2050 WORTH ST., SUITE 5
FT. SAM HOUSTON, TX 78234-6005

3. **DEFENSE CONTRACT MANAGEMENT AGENCY (DCMA):** When DCMA inspectors are responsible for performing Government source inspection at the flameless ration heater (FRH) manufacturing facility, one copy shall be personally delivered to the resident Government QAR prior to the initiation of production. The contractor/subcontractor shall contact the applicable DCMA office for inspection services.

DCMA GARDEN CITY
605 STEWART AVE.
GARDEN CITY, NY 11530-4761

DCMA DAYTON
1507 WILMINGTON PIKE
DAYTON, OH 45444-5300

4. **GOVERNMENT IN-PLANT INSPECTOR/GQAR:** When a Government (USDA-AMS, AVI, or DCMA) inspector is assigned to perform Government source inspection at a

contractor/subcontractor facility, one copy shall be **personally delivered to the Government inspector prior to the initiation of production.**

Aforementioned Government inspection personnel and In-Plant Government QARs shall fax, e-mail, or mail (via priority mail) their evaluations and comments to the contractor's QSPs and/or QSP's revisions, **within 20 calendar days** from the day of receipt of the QSP/revision.

Failure to submit comments within the suspense date may result in DLA Troop Support - FTSB Quality Systems Auditors not including the applicable inspection agency's comments in Government QSP joint evaluations. In-Plant Government QARs are also required to report quality systems noncompliances within **one working day** using the Corrective Action Request (CAR) Form. QSP evaluations and CARs shall be faxed to the DLA Troop Support - FTSB Quality Systems Audit Team at fax number (215) 737-0379, the current DLA Troop Support - FTSB's personnel E-mail addresses or mailed to the following address **(the preferred and most expeditious method is via E-mail or fax):**

DLA TROOP SUPPORT
ATTN: DLA Troop Support - FTSB (Quality Systems Audit Team)
700 ROBBINS AVENUE, Bldg. 6
PHILADELPHIA, PA 19111-5092

During the Acquisition Phase: During the acquisition phase (prior to contract award), the documented QSP will only be considered either sufficient or insufficient for production (no unacceptable/acceptable rating will be assigned). If a plan as presented is determined to be insufficient for production (which would occur if it does not address the aforementioned minimum elements and include documents/procedures indicated in Workbook I as applicable, or if it is determine that the plan as presented will result in an increase in the consumer's risk, production of nonconforming products or does not meet specification requirements/acquisition needs), the contracting officer, at his/her discretion, may provide the contractor with DLA Troop Support - FTSB's QSP evaluation comments as to cause(s) of why the plan was considered insufficient for production and with the opportunity to resubmit a revised QSP. **If a contractor has previously submitted a QSP and the rating was, at a minimum, marginally acceptable, the contractor may reference this QSP by date and only changes (if deemed necessary) need to be submitted at time of bid submittal for this or for future contracts**.

After the Acquisition Phase: After the Acquisition Phase (after contract award), if the contractor submitted a new QSP, DLA Troop Support - FTSB will assign a rating of acceptable, marginally acceptable or unacceptable (to a QSP rated sufficient for production during the acquisition phase) within 60 days of contract award. **If a contractor's QSP is rated unacceptable after contract award, the QSP must be revised to receive, at a minimum, a marginally acceptable rating within 90 days of contract award.** The contractor will also be provided with an opportunity to submit changes to improve the plan throughout the life of the contract.

DLA Troop Support - FTSB Quality Systems Auditors evaluate, assign QSP ratings, and approve or disapprove changes to the QSP. **QSP procedures or changes to a QSP that may involve a change to a specific contractual requirement (cited in the contract TDP/ items specification/CID) must be coordinated and approved by the Contracting Officer.** To expedite the evaluation process, all QSP changes **(that do not involve a specific contractual change) shall be simultaneously** provided to the

In-Plant GQAR and a copy faxed, E-mailed, or mailed to DLA Troop Support - FTSB and each applicable office for their review. The GQAR's in-plant evaluation will be considered sufficient for production, unless specifically rejected by DLA Troop Support FTSB after the contractor submits the change to DLA Troop Support. The contractor's documented QSP is considered a living document and continuous improvements are highly encouraged.

Implementation, compliance, effectiveness, and continuous improvement of the QSP and the implemented quality system will be monitored by on-site quality systems compliance audits conducted throughout the life of the contract by the Quality Systems Audit Team and evaluations/internal audits conducted by the In-Plant Government QARs.

If a contractor fails to submit an acceptable QSP or copies of their QSP's revisions to the Government for review or does not comply with other requirements of the contract, the Government may decline to perform verification acceptance inspection at that time and or refuse to accept any product produced in accordance with FAR 46.102 and 46.407. Additionally, the Government may also withdraw the acceptance of a QSP during the contract period if it is determined that the contractor has not implemented, complied with the documented QSP, or the implemented quality system is not sufficient to meet minimum contractual requirements.

NOTE: DLA Troop Support - FTSB and/or the Government QARs shall immediately notify the Contracting Officer of **ALL** noncompliance to specific contractual requirements. DLA Troop Support - FTSB will notify and/or obtain contracting officer's support/involvement when a contractor fails to comply with the approved documented QSP requirements or fails to respond to quality systems deficiencies noted during an on-site compliance audit or evaluations/audits conducted by In-Plant Government QARs.

The offeror/contractor agrees to maintain current, and make available, all documents/records required by the documented QSP for Government review at any time throughout the life of the contract and for three years after final delivery on the contract (to include any documents/records maintained by any subcontractor used by the prime contractor to fulfill a Government contract).

NOTE: The procedures of how a contractor intends to comply with the requirements of the MPC Clause or the SPC QAP, as applicable, shall be covered in the In-Process and Process Inspection and Testing Section of the contractors' documented QSP/Quality Manual. If the contractor uses a different/numbering system than the Section/Element number cited in the TDP, the contractor's should cross-reference each applicable section of their QSP.

E-1-B. The following DLAD Clause 52-246-9001 is applicable to this contract:

52.246-9001
MANUFACTURING PROCESS CONTROLS AND IN-PROCESS INSPECTIONS
(JUN 1998)-DLAD

This clause supplements paragraph 4.9 (Process Controls) of ANSI/ASQC Q9001, or equivalent standards with process controls, and is applicable when the contract requires a higher-level quality system in accordance with FAR 46.202-4. The contractor shall:

(A) Ensure that all manufacturing operations are carried out under controlled conditions that will adequately assure that product characteristics and criteria specified by contract are achieved and maintained in the produced item. Controlled conditions include documented process control and in-process inspection procedures, adequate methods for identifying and handling material, adequate production equipment and working environments.

(B) As a minimum, perform inspections (examinations and/or tests) during manufacturing on those product characteristics which cannot be inspected at a later stage, and ensure process controls are implemented and effective.

(1) Manufacturing processes shall be evaluated to determine which process characteristics have an effect on the quality of the produced item. These manufacturing processes shall be identified and requirements for their control shall be specified in written process control procedures.

(2) When in-process inspection of material is not practical, control by monitoring processing methods, equipment and personnel shall be provided. Both in-process inspection and process monitoring shall be provided when control is inadequate without both.

(3) Prompt corrective action shall be taken when noncompliance or out of control conditions occur. In the event appropriate corrective and preventive action fails to rectify the product noncompliance; correct the out of control conditions; and/or if these actions are not documented to ensure, to the satisfaction of the Government, that the production lot offered to the Government does not contain nonconforming product, then end item acceptance inspection, and/or acceptance of the end item by the Government may be denied IAW FAR 46.102 and 46.407.

(C) Clearly identify each in-process inspection and process control point at appropriate locations in the manufacturing operation.

(D) Prepare clear, complete and current written procedures for:

(1) Each in-process inspection. Identify: the type, frequency and amount (sampling plan/100 percent) of inspection; product characteristics to be inspected; criteria for approving and rejecting product; the record for documenting inspection results, and the method for identifying the inspection status of approved and rejected product.

(2) Each process control. Identify: the criteria, frequency, and records used for verifying control of the process.

(3) Assessing the adequacy of in-process inspections and process controls. The contractor's Quality organization shall assure by periodic surveillance that procedures are followed and are effective. Records of this surveillance will be maintained.

(E) Make the documented inspection system available for review by the Government Quality Assurance Representative prior to the initiation of production and throughout the life of the contract. The Government is under no legal obligation to perform verification inspection or to accept product produced under the contract until the Government has received acceptable written procedures, and has been afforded an opportunity to evaluate the inspection system. Acceptance of the contractor's inspection system by the Government does not bind the Government to accept any nonconforming supplies that may be produced by the contractor. Periodic evaluations of the documented QSP and implemented system compliance and effectiveness will be made through the use of yearly on-site compliance systems audits conducted by the Quality Systems Audit Team and In-Plant GQARs throughout the life of the contract.

(End of Clause)

E-1-C. The following Statistical Process Control Quality Assurance Provision (SPC QAP) applies to this contract:

QUALITY ASSURANCE PROVISION
Statistical Process Controls
DLA Troop Support H-94-001

The requirements of this QAP shall be addressed in the Documented Quality System Plan (QSP) when applicable. Redundant areas/requirements cited in this QAP or the MPC Clause need only be addressed once in the In-Process and Process Inspection and Testing Section and/or other applicable section of the contractors' documented QSP/Quality Manual. The characteristics requiring control will be those characteristics providing the best assurance of product conformance to end item contractual requirements. Therefore, the techniques (SPC/MPC) selected to control the processes shall be those that can best and most effectively/efficiently control the characteristics identified and provide the best assurance that the system implemented will consistently produce product conforming to contractual requirements. If the contractor uses a different/numbering system than the Section/Element number cited in the TDP, the contractor's QSP should cross-reference each applicable section/element of their QSP.

I. <u>General Requirements</u>:

A. The offeror/contractor agrees to manage and improve process performance through the evaluation of the quality of the product at the prime contractor and, when required by contract, at subcontractor facilities, using SPC techniques or MPC techniques.

B. Minimum criteria are established in the American Society of Quality Control (ASQC) standards B.1, B.2 and B.3 (formerly the ANSI standards Z1.1, Z1.2, and Z1.3). Alternate SPC techniques such as short run methods are also allowed where applicable.

C. This QAP applies to all work performed at the prime contractor and, when required by contract, at subcontractor facilities. However, in those instances where it is not required of the subcontractor by contract, it does not prohibit the prime contractor from requiring it from their subcontractor of their own accord.

D. The implementation of SPC techniques (or alternate MPC techniques) and procedures shall be prepared in accordance with this provision and included in the documented QSP. Each offeror shall address the requirements of this QAP in their documented QSP (Section/Element VIII) and included with the proposal, when applicable. Failure to do so may result in rejection of the offer.

E. **Exclusion of documented QSP submission: If a contractor has previously submitted a QSP and the rating was, at a minimum, marginally acceptable, the contractor may reference their QSP by date** and only changes (if deemed necessary) need to be submitted at time of bid submittal for this or for future contracts.

1. Offerors who consider themselves eligible for exclusion of the documented QSP at bid submittal, based on satisfactory utilization of a previously approved QSP for identical or similar

supplies, are to submit a written request for exclusion (RFE) to the Procuring Contracting Officer (PCO).

The offeror shall identify in the RFE the contract number(s) under which the supplies were previously furnished by them and accepted by the Government; and the applicable item nomenclature and National Stock Number(s); and the date of the documented QSP. QSP changes/revisions/updates, if applicable, need to be submitted along with the RFE at time of proposal. NOTE: Changes/revisions/updates must be well identified, dated and organized to facilitate posting to the QSP.

2. If techniques selected (MPC, SPC, or combination of both) were determined to be adequate (in a QSP previously submitted and approved by DLA Troop Support - FTSB), the offeror shall certify that these techniques are still adequate to effectively control the processes and that the system implemented is still capable of consistently producing conforming product.

II. <u>SPECIFIC REQUIREMENTS</u>:

A. The offeror shall identify the characteristics to be controlled using SPC techniques (or the alternate MPC techniques). Application of SPC techniques shall be considered for all characteristics identified by performing pareto analysis on the defects from previous production, or projection of potential defects in future production, to discern the vital few and repetitive type failures from the trivial many. Additionally, offerors are encouraged to calculate quality costs to assist in determining what characteristics or processes to control statistically (QSP Element XIII). These defects, and all other characteristics identified by the offeror from process capability studies on current production, shall be subject to the application of SPC techniques or other analyses. The characteristics requiring control will be those characteristics providing the best assurance of product conformance to end item contractual requirements. In addition to the characteristics identified by the offeror, the following characteristics will be controlled using SPC techniques, MPC techniques, or other alternate controls methods deemed appropriate and effective in controlling the processes. Alternate controls to SPC and MPC must be clearly identified and explained in detail in the In-Process and Process Inspection and Testing Section of the contractors' documented QSP/Quality Manual. **The description of SPC or MPC techniques shall be sufficient to allow a reviewer unfamiliar with the item or the contractor's production operation to properly assess the applicability of the control measures/techniques being proposed.**

1. For Thermostabilized or Hot Filled Items: (1) Laminated barrier pouch/tray integrity (absence of tears, cuts, holes, delamination, abrasions, leakage, and non-fusion bonded seals, etc.), (2) Polymeric tray integrity (absence of tears, cuts, holes, delamination, abrasions, leakage, and non-fusion bonded seals, etc.) and (3) All thermostabilized items - the critical control points of the process schedule as determined by the contractor's Processing Authority and critical control points of the retort process schedule. The critical control points, other control points, and the contractor's Processing Authority shall be clearly identified in the Regulatory Controls Section and/or the In-Process and Process Inspection and Testing Section of the contractor's QSP, as applicable.

2. For Water Activity Stabilized Items: (1) Laminated barrier pouch/tray integrity (absence of tears, cuts, holes, delamination, abrasions, leakage, and non-fusion bonded seals, etc.), (2) Polymeric tray integrity (absence of tears, cuts, holes, delamination, abrasions, leakage, and non-fusion bonded seals, etc.) and (3) All water activity-stabilized items - control of water activity, and oxygen scavenger

placement. The control points shall be clearly identified in the In-Process and Process Inspection and Testing Section of the contractor's QSP.

3. Flameless Ration Heater (FRH): The FRH chemical formulation and those processes that affect the formulation, performance, and the packaging (including over-wrapped FRH) of the FRH. The control points shall be clearly identified in the In-Process and Process Inspection and Testing Section of the contractor's QSP.

4. Assembly Operations: The use of SPC and/or MPC techniques is required. However, the Assembler shall determine application of SPC/MPC techniques for the assembly and sub assembly processes by performing a Pareto analysis. NOTE: The assembler shall identify the type of controls (MPC, SPC, or both) being applied for each process identified. The control points for the assembly and subassembly processes shall be clearly identified in the In-Process and Process Inspection and Testing Section of the Assembler's QSP.

5. For Other Items SPC techniques are optional.

B. The SPC and MPC techniques (or combination of both) will be evaluated as part of the documented QSP for the firm or firms eligible for award.

C. A documented QSP determined to be Insufficient for Production during the acquisition phase or seriously deficient may preclude the offeror from receiving an award. However, the PCO has the final authority and he/she may permit an offeror to revise a deficient QSP provided it is reasonably capable of being made sufficient for production or acceptable. Failure to negotiate a sufficient for production and/or acceptable QSP, as applicable, may also preclude the offeror from receiving an award.

D. **SPC Program:** The information requested in Workbook I, In-Process and Process Inspection and Testing Section (Area 1 and 2 as applicable) shall be covered in the applicable section of the contractor's QSP. For characteristics as designated by the Offeror and/or the Government to be controlled using SPC or MPC techniques as indicated above, the QSP, as a minimum, must address the following: The QSP must identify and define each in-process control point (IPCP) and/or process control point (PCP) in sequence in relation to the production, subassembly/assembly flow or chain of events (from weighing/mixing/batching of ingredients/materials, packaging, to final product); clearly identify the control technique selected (SPC/MPC or combination) to control each process identified; the number of samples selected, location of sample selection, and frequency of sampling at each IPCP and PCP identified; include procedures that describe the production/assembly operations and how the contractor ensures these are carried out under control conditions to assure that product characteristics and criteria specified in the contract are achieved and maintained in the finished product (end item); and identify documents that are the basis for the SPC/MPC program including internal audits, textbooks, standards, and/ or Government documents.

E. **Structure (policy/scope):** The QSP shall identify the contractor's policy for applying SPC and the contractor's goals and commitments regarding SPC and continuous process improvement. The contractor may also discuss alternatives to SPC techniques (MPC techniques or other control technique) that have successfully reduced/prevented the production of defects. Information must be covered in the

Management Responsibility and Quality System Design Section I of the QSP or other applicable section of the contractor's QSP.

F. **SPC Training:** Information must be covered in the Training Section of the QSP or other applicable section of the contractor's QSP.

G. **Vendor/Subcontractor/Purchase Controls:** Information must be covered in the Contract Review, Purchasing, and Customer-Supplied Product of the QSP or other applicable section of the contractor's QSP.

H. **Manufacturing Controls: (IAW DLAD Clause 52-246-9001 Manufacturing Process Controls and In-Process Inspection as applicable).** The information requested in Workbook I, In-Process and Process Inspection and Testing Section (Area 1 and 2 as applicable) should be covered in the applicable section of the contractor's QSP (for characteristics as designated by the Offeror and/or the Government to be controlled using SPC or MPC techniques as indicated above): The QSP must clearly identify the control technique selected (SPC/MPC or combination) to control each process identified. Must include procedures that describe the production/assembly operations and how the contractor ensures these are carried out under control conditions to assure that product characteristics and criteria specified in the contract are achieved and maintained in the finished product (end item).

I. **Statistical Process Control Procedures (General):** The information requested in Workbook I, In-Process and Process Inspection and Testing Section (Area 1 and 2 as applicable) should be covered in the applicable section of the contractor's QSP (for characteristics as designated by the Offeror and/or the Government to be controlled using SPC or MPC techniques as indicated above):

1. **Criteria for Using SPC Techniques:** How the contractor determined which processes were appropriate for use of SPC or MPC techniques; process capability studies (application); types of charts used and rationale for use; and computer hardware/software used for SPC (if applicable).

2. **SPC Auditing and Review Procedures:** This information must be covered under the Internal Audit Section or other applicable section of the contractor's QSP

3. **SPC Records**. How the following records apply/correlate to the SPC program: Incoming inspection, manufacturing inspection, subcontractor inspection, internal and external failure reports, corrective action reports, control charts, scrap and rework reports, lessons learned, recommendations and feedback, etc. The information must be included in the In-Process and Process Inspection and Testing Section (Area 1 and 2 as applicable), the Document and Data Control and Control of Quality Records Section of the QSP or in the applicable section of the contractor's QSP.

J. When the documented QSP is rated acceptable and the system implemented is effective in consistently producing conforming product, the contractor may qualify for Government verification skip-lot inspection (Procedures for Alternative Skip-Lot End Item Inspection Requirements for Government Verification Inspections for Operational Rations). The Government reserves the right to return to the original acceptance sampling requirements if Government source inspection is waived, skip-lot is not in the best interest of the Government or for other causes as indicated in the procedure. The documented QSP shall be documented, dated, and signed by a responsible company official, and

will be distributed under company letterhead as indicated in preceding paragraph “Higher Level Requirement - Quality Systems Plan (QSP)". The contractor is required to incorporate the requirements of this SPC QAP in the In-Process and Process Inspection and Testing Section (Area 1 and 2 as applicable) of the QSP or other applicable sections of the contractor’s QSP.

E-1-D. The contractor's documented QSP and implemented Quality Systems are to be verified by the in-plant Government QARs/inspectors, when Government source inspection is required, in accordance with the Supplier Support Documented QSP Evaluation Workbook I, the regulation/file code of the respective inspection agency, and the particular requirements detailed in the contract.

E-2. Particular Requirements for Ration Assembler

E-2-A. The word "contractor" as used herein, shall mean the ration assembly/sub assembly contractor to which this contract applies.

E-2-B. The contractor will have a quality assurance program that supports continuous improvement in accordance with paragraph E-1 above and the particular requirements applicable to the MRE outlined herein for the final assembly of the MRE ration, the unit packaging of food components, accessory bags and menu sub assembly pack bags.

E-2-C. Government verification inspection and testing (conducted by the GQAR or Government laboratory) shall be withheld, at a minimum, until the contractor's completed inspection results are presented to the Government's Quality Assurance Representative (GQAR). Unless otherwise authorized, in writing, by the contracting officer, the GQAR and/or Government laboratory shall not perform Government verification inspection/testing unless the contractor's lot submittal package (inspection/test results-including analytical testing) provided to the GQAR indicates conformance to ALL contractual requirements

E-2-D. Government verification inspection may be accomplished by utilizing smaller sample sizes provided sampling plans utilized do not increase producer's sampling risk as assessed by applicable (ANSI/ASQC Z1.4) operating characteristic curves. Contracting Officer approval must be obtained prior to skip lot and/or reduced inspection.

E-2-E. When representatives of the U.S. Army Veterinary Command are designated cognizance for the support of the Government's quality assurance requirements, the responsibilities and authorities cited in the regulations, command policies, etc. of the respective agency and those regulations, command policies, etc. to which that agency is subject, are applicable to the contract in conjunction with the quality assurance requirements of the contract.

E-2-F. AVI inspection is required for the sub assembly packaging, at the assembly plant, of bulk-packed items that are individually packaged by an assembler/packer in military packaging (laminated barrier pouches), accessory bags, menu sub assembly pack, and MRE final assembly, i. e., MRE menus and final cases. When the sub assembly packaging of the aforementioned products occurs at a location not under the supervision of the Army Veterinary Inspector, the process shall be under the requirements of contractor-paid USDA,AMS,FV,PPB inspection. When dairy component products (cocoa beverages,

dairy shakes, flavored coffees, non-dairy creamer, puddings, granola with milk and blueberries, ice cream sandwich etc), are packaged into finished product at the assembler's plant, in-process and final inspection will be under the requirements of contractor-paid USDA,AMS,FV,PPB inspection. Regardless of the Government agency designated cognizance for the support of the Government's quality assurance requirements at the supplier's production/assembly facility, a USDA laboratory will perform all Government verification testing. The contractor shall bear all expenses incident thereto, including costs of samples and all associated costs for preparation and mailing. Costs shall be assessed in accordance with the Government laboratory testing charges for individual test characteristics and number of tests required by the specification or contract. A list of fees may be obtained from the appropriate USDA laboratory. The regulations, file codes, etc. of the respective inspection agency are applicable to the contract in conjunction with the quality assurance requirements of the contract.

E-2-G. Plan for the Inspection Job (PIJ)

(A.) Prior to initiating production of supplies, the contractor must furnish information to and cooperate in the completion by the QAR of DLA Troop Support Form 3587 (Plan for the Inspection Job (PIJ)) which may include, but not necessarily be limited to, the following data or information:

1. Detailed production schedule.
2. Lot size, lot presentation, and sampling procedures and techniques.
3. Facilities to be provided Government personnel.
4. Name(s) and title(s) of authorized contractor representatives.
5. Agreement that the cognizant quality assurance service will be notified in advance of each day's production so that arrangements can be made by the Government to have Quality Assurance Representatives (QAR) available.
6. Procedures for notification of critical defects, ex. swellers, leakers and/or excessive amounts of defects being found.

(B.) The PIJ prepared by the QAR is deemed complete and approved for the production of supplies as described therein when dated and signed by the contractor and the QAR. A copy of the completed and signed PIJ and subsequent revisions shall be submitted to DLA Troop Support -FTSB. Preparation of this document may require preproduction/postaward conferences between Government and contractor representatives. The contractor shall sign and date the PIJ to signify agreement to all terms and conditions therein. Production of supplies shall not commence until the document is signed by both parties. The document may remain in effect for subsequent contracts provided it is reviewed (revised as necessary) at quarterly intervals, initialed and dated by the contractor and the QAR to certify currency. The document shall be revised/amended prior to production of new items not included in the basic document or whenever significant changes occur in contractual inspection documents that necessitate modification. When signed by both the contractor and the QAR, the PIJ document is contractually binding. Failure of the contractor to comply with the document will be reported by the QAR to the contracting officer for appropriate action for noncompliance with the inspection requirements of the contract. However, occasional minor deviations from the scheduled production hours or lot size(s) cited in the PIJ may be approved by the QAR for cogent reasons. The contractor shall make no changes in the approved PIJ document without submitting a written request detailing the change and receiving written approval from the QAR. In the event the contractor and the QAR cannot agree on any detail of the content of the document, the QAR shall refer the conflict to the contracting officer for resolution.

E-2-H. Traceability Requirements and Examination

The ration assembler shall maintain records identifying the menu components used in packing and assembling each end item lot. These records shall maintain traceability of components to the extent that a lot and contract number of a component can be traced to an assembled end item lot. The system should also enable the assembler to list component contract numbers and lots within a particular end item lot. The assembled end item lot, usually one day's production, shall be clearly identified on the exterior of each case. In addition, the ration assembler shall maintain records of when and where assembled end item lots for a particular assembly contract have been shipped. The ration assembler shall provide the AVI (Army Veterinary Inspector) with a copy of the lot traceability records prior to shipment of each assembled lot. The following non-food items are exempt from traceability requirements: hand cleaner, matches, spoons and toilet tissue.

The purpose of the above, is to maintain traceability of a component lot through the assembly operation, in depot storage and up to the customer's receipt of the MRE ration. This is necessary in the event of a recall/ALFOODACT for DLA Troop Support to isolate suspect product in the depot system and to notify customers of potentially hazardous product.

In addition to the manual system described above, the ration assembler shall input traceability data on a daily basis into the computerized program. The ration assembler will input all traceability data daily, and provide a hard copy print out to veterinary personnel on a daily basis.

Each lot of assembled rations shall be examined to determine compliance with lot traceability requirements prior to shipment. The examination shall be accomplished by using the same sampling plan and samples examined under Section E, paragraph C. (4) Assembled meal bag examination of the applicable version of ACR-M-032. Acceptable Quality Levels (AQL) are not applicable for the traceability examination. The component lot numbers are recorded from the samples and compared against the lot traceability records provided by the assembler. A defective component lot number is a code which does not correlate with traceability records. Missing or illegible component lot numbers are not to be scored as defects unless there is reason to believe that the component represents a lot other than a lot listed by the traceability records. The finding of any defect will be cause for rejection of the lot.

E-2-I. Assembly of Mixed Code Lots

Mixed lots are small quantities of components representing different lots. These lots may be received from GFM or CFM contractors and/or may include component material from the salvage operation or other sources that has been determined to be conforming and authorized for use in assembly. Unit loads containing mixed code lots, shall be identified as such by the use of unit load marking panels. The unit load marking panels shall list all the lots contained on the pallet; they shall be affixed to two sides of the unit load. The assembly contractor may periodically assemble the mixed lots into one lot. Mixed lot components shall be exhausted by assembling them into a final lot at least once every quarter but may be assembled into two consecutive production days if not more than once a month. For the purpose of precluding residual mixed lot components, all mixed lots components in-house prior to the final week of scheduling assembly production, shall be used in final assemblies delivered under this contract.

E-2-J. When the original lot of a component is still available at the assembly plant, components, including inspection samples, will be returned to their original lot for assembly into MRE finals.

E-2-K. Receipt Inspection (CFM and GFM)

In addition to the origin inspection specified above, the supplies delivered shall be subject to receipt inspection at destination in accordance with the following criteria:

All items delivered (CFM and GFM) will be inspected in accordance with the assembler's receipt inspection program as outlined in the assembler's Quality Systems Plan (QSP). The receipt inspection shall be, at a minimum, for count, condition, identity, and the presence of any internal infestation or foreign material. Any evidence of insect or rodent infestation, foreign material, or contamination shall be cause for rejection of the entire production lot.

Receipt examinations for pouch integrity (CFM and GFM) shall be performed in accordance with origin pouch examination criteria for each production lot of cheese spread and product packaged in accordance with MIL-PRF-44073. Samples for receipt inspection (ex. 200 samples items packed in accordance with MIL-PRF-44073) shall be selected throughout the lot at the destination point (applicable for entire lots or split lots). Mixed code lots as defined in the Technical Data Package will be considered as a single lot. Receipt inspection for pouch integrity of entire production lots or split lots from the origin producer to their own assembly plant located within the same state should be performed at their option or performed in accordance with the assembler’s QSP. Other receipt inspections shall be at a minimum inspection level of S-3 of ANSI/ASQC Z1.4. At no time may the assembler’s receipt inspection be more severe than the origin inspection criteria for GFM. Defect classification shall correspond to the origin specification defect classification.

The contractor’s receipt inspection program will be verified by the U. S. Army Veterinary Inspection (AVI) personnel at the assembly plant. Defects found on GFM deliveries will be verified by the AVI. Final responsibility for acceptance or rejection of GFM product will rest with the Government inspector, however, the Government may base its decision on the contractor’s inspection results. In addition, the AVI may perform their own receipt inspection before making a final determination of acceptance or rejection of product. Any inspection failure shall be considered to be representative of the entire production lot and shall be cause for rejection of the entire production lot.

For wet pack fruit (including applesauce and spiced apples), abrasions at destination, found during the assemblers receipt inspection, may be classified as a major defect and accepted under an Acceptable Quality Level (AQL), if the assembler so chooses. Each assembler would be required to specify in their QSP the AQL for the acceptance of abrasions, based on sampling size. If an assembler chooses not to accept abrasions as a major defect, they may leave the defect as critical, which would result in failure of the lot if found. AQLs for abrasions contained in the assembler’s QSP must be approved by DLA Troop Support - FTSB. If the lot is not accepted at one destination due to an abrasion(s) and the lot is redelivered to a second destination without rework, the finding of an abrasion during receipt inspection will be cause for rejection of the entire lot.

Grand lotting of more than one production lot of homogeneous components within a shipment for the purpose of receipt inspection may be performed, except for pouch integrity as cited above. There will be no grand lotting of thermostabilized items (entrees, starches and soups, fruits), granola, and cheese spreads for pouch integrity inspection. When the total shipment is inspected as a single lot, the identity of the items must be maintained and samples must be drawn from each lot in proportion to its size. Homogeneous components are defined as follows: items procured by identical prime documents (identical PCRs, Commercial Item Descriptions) except for items packaged in accordance with MIL-PRF-44073, PCR-G-003, and PCR-C-039.

The reliability of the contractor's receipt inspection system will be determined by the AVI in accordance with paragraph "Reliability Conditions" cited in the assembly solicitation. However, the frequency of verification of the contractor's receipt inspections will remain at the discretion of the Government.

E-2-L. In the event the assembler is also a manufacturer of component(s) of the MRE, the requirements of paragraphs E-1, E-2, E-3, E-4, and E-5 are required where applicable to components being manufactured.

E-2-M. Subcontracts

(1.) The contractor agrees that the Government shall have the right to perform a source inspection of components to be used in the manufacture of the supplies covered herein whenever the contracting officer deems such an inspection appropriate; where source inspection requires the additional consent to inspection from subcontractor, the contractor agrees to obtain such consent.

(2.) In addition to obtaining consent to inspection from subcontractors, the prime contractor agrees to stipulate the applicable inspection provisions cited in paragraphs E-1, E-2, E-3, E-4, and E-5 as requirements in the contract(s) with the subcontractor(s).

(3.) The prime contractor shall furnish with his offer a written certificate to the contracting officer as to the name of the subcontractor(s) utilized, including location and item procured. This includes the suppliers of the flameless ration heaters and packaging and packing materials requiring source inspection by the DCMA Quality Assurance Representatives. In the event the listing needs to be revised after award is made, the prime contractor shall furnish a revised listing to the Contracting Officer.

(4.) The prime contractor shall be responsible for the performance of all subcontractors. The prime contractor shall impose the responsibility for quality control, inspection, and providing inspection records on subcontractors, as required to insure compliance with specifications and conformance to contract requirements. Such inspections shall be accomplished by contractors, subcontractors, or when requried by the applicable federal inspection agency at contractor or subcontractor expense. However, to the extent that the offeror does propose to utilize subcontractors for the performance of this contract, determination by the Contracting Officer of the prospective subcontractor's responsibility will be necessary in order to determine the responsibility of the offerors; and this determination of responsibility shall be based on the same factors as are applicable to the determination of the responsibility of the offeror.

(5.) To enable the contracting officer to make a determination of responsibility, each offeror must furnish with his offer the name and address of each subcontractor from whom it proposes to obtain the component(s).

E-3. Quality Assurance Requirements for Ration Assembler, Ration Component Production Plants and Ration Sub Assembly and Assembly Plants.

E-3-A. For entrees, starches and soups, and fruits procured as contractor furnished material (CFM) components, when the manufacturer/packager is the prime contractor (assembler), or a subcontractor, origin inspection shall be contractor paid United States Department of Agriculture, Agricultural Marketing Service, Fruit and Vegetable Division, Processed Products Branch (USDA,AMS,FV,PPB) inspection in accordance with DLAD clause 52.246-9023, unless otherwise

specified by this solicitation/contract. The regulations, file codes, etc. of the respective inspection agency are applicable to the contract in conjunction with the quality assurance requirements of the contract. Optional contractor testing provided by DLAD clause 52.246-9024 is applicable, unless otherwise specified by this solicitation/contract. When permitted by the applicable food component specification, a Certificate of Conformance (COC) for ingredients shall be provided in accordance with FAR Clause 52.246-15.

E-3-A-1. Quality Assurance Provisions to be used in conjunction with the Quality Assurance Provisions for MIL-PRF-44073, Packaging of Food in Flexible Pouches

Inspection of finished product lots packaged in accordance with MIL-PRF-44073 shall be in accordance the inspection requirements cited in Section 4 of MIL-PRF-44073, Section E of the component's Performance Contract Requirement or Packaging Requirements and Quality Assurance Provisions for CID as applicable, and the provisions cited in this paragraph.

NOTE: These quality assurance provisions are to be used in conjunction with the MIL-PRF-44073 and are in addition to those cited in Performance Contract Requirements and Packaging Requirements and Quality Assurance Provisions documents and supersede those documents where applicable.

(A.) Definitions

1. Critical defect. A critical defect is a defect that judgment and experience indicate would result in hazardous or unsafe conditions for individuals using the item.
2. Major defect. A major defect is a defect, other than critical, that is likely to result in failure, or to reduce materially the usability of the unit of product for its intended purpose.
3. Minor defect. A minor defect is a defect that is not likely to reduce materially the usability of the unit of product for its intended purpose, or is a departure from established standards having little bearing on the effective use or operation of the unit.

(B.) Quality Assurance Provisions (Packaging and packing materials)

1. Quality Assurance Criteria. The following quality assurance criteria, utilizing ANSI/ASQC Z1.4, Sampling Procedures and Tables for Inspection by Attributes are applicable.

A. Pouch material testing. The pouch material shall be examined for the characteristics listed in table I-A of this paragraph for Type I.. The lot size, sample unit, and inspection level criteria for each of the test characteristics are listed below. Any test failure shall be classified as a major defect and shall be cause for rejection of the lot.

TABLE I-A.

Characteristic	Lot size expressed in	Sample unit	Inspection level
Oxygen transmission rate	yards	1/2 yard	S-1
Water vapor transmission rate	yards	1/2 yard	S-1
Camouflage	yards	1/2 yard	S-1
Thermal processing	pouches	1 pouch	S-2

Low temperature	pouches	1 pouch	S-2
High temperature	pouches	1 pouch	S-2

B. Filled and sealed pouch testing. The filled and sealed thermoprocessed or hot-fill processed pouches shall be tested for the characteristics listed in table II of this paragraph for Type I. The lot size, sample unit, and inspection level criteria for each of the test characteristics are listed below. Any test failure shall be classified as a major defect and shall be cause for rejection of the lot.

TABLE IV Filled and sealed pouch tests

Characteristic	**Lot size expressed in**	**Sample unit**	**Inspection level**
Residual gas volume	pouches	1 pouch	S-2
Internal pressure	pouches	1 pouch	S-2 1/
Directional tear	pouches	1 pouch	S-2

1/ When a three-seal tester is used, a separate set of samples is required for testing of the closure seal.

C. Pouch examination. The pouches shall be examined for the defects listed in table II of MIL-PRF-44073 for Type I. The lot size shall be expressed in pouches. The sample unit shall be one thermal processed pouch. The inspection level shall be I and the AQL, expressed in terms of defects per hundred units, shall be 0.65 for major A defects, 2.5 for major B defects, and 4.0 for minor defects. **Two hundred sample units shall be examined for critical defects. The finding of any critical defect shall be cause for rejection of the lot.**

D. Examination of pouch and carton assembly. The completed pouch and carton assemblies shall be examined for the defects listed in table III of MIL-PRF-44073 for Type I. The lot size shall be expressed in units of completed assemblies. The sample unit shall be one pouch and carton assembly. The inspection level shall be S-3 and the AQL, expressed in terms of defects per hundred units, shall be 0.65 for major defects and 2.5 for minor defects. **Fifty sample pouch and carton assemblies shall be examined for critical defects. The finding of any critical defect shall be cause for rejection of the lot.**

E-3-A-2. Additional Quality Assurance Provisions for MIL-PRF-44073, Packaging of Food in Flexible Pouches

The following procedures for sampling and inspection shall also be applied when an end-item's filled and sealed pouch examination is required to be performed in accordance with paragraph 4.3, “Examination of pouch”, of MIL-PRF-44073. These procedures shall be applied to inspection results where critical defects are a determining factor in the rejection of a lot.

Change in severity of inspection shall be based on the critical defect category and determined by component type, regardless of lot size. For Normal inspection the sample size shall be 200 sample units and for Tightened inspection 315 sample units examined for critical defects and the finding of any critical defect shall be cause for rejection of the lot. Normal inspection will be used at the start of inspection. Normal inspection shall continue unchanged for the critical category of defects on successive lots except where the procedures given in ANSI/ASQC Z1.4, Sampling Procedures and Tables for Inspection by Attributes, require a change in the severity of the inspection, from Normal to Tightened. The procedures given in ANSI/ASQC Z1.4 shall be used to switch from Tightened inspection to Normal inspection. There will be no "reduced" inspection option. The Government has the right to discontinue Government inspection as cited in ANSI/ASQC Z1.4 or the MPC clause or both.

1. The Government QAR will notify the contractor of a change in the severity of inspection as a result of Government origin inspections. The contractor is required to perform inspections which provide the same risk (equal or better) as those performed by the Government (ex: the contractor must select for end item examination, as a minimum, the same number of samples selected by the Government for end item inspection).

2. Upon notification by the Government QAR of change of severity of inspection from Normal to Tightened, the contractor shall submit a corrective action plan to the Government QAR and the Contracting Officer. Government QAR will withhold inspection of lots produced after notification until corrective action plan is received and approved. The corrective action plan shall contain, as a minimum, the following:

A. Root cause of the deficiency.
B. Action taken to correct the deficiency.
C. Action taken to correct and prevent recurrence of root cause of deficiency.
D. Corrective action effective date(s).
E. Contractor, subcontractor, or supplier representative responsible for implementing corrective action.

As authorized by the Contracting Officer. Discontinuation of inspection may be invoked by the Contracting Officer when there is a pending action against a contractor to improve the quality of the submitted product/material, a contractor fails to submit a corrective action plan, and/or a corrective action plan is not effective in correcting or in preventing recurrence of root cause of the deficiency.

In addition to the above, the Contracting Officer, at his discretion, may invoke increased inspection for critical defects at origin and/or destination when determined to be in the best interest of the Government.

E-3-A-3. Additional Requirements for Entrées, Starches and Soups, and Fruits Analytical/ Nutrient Content Testing

The following applies to the nutrient content testing for entrees, starches and soups, and fruits found in the Performance-based Contract Requirements and Product Contract Requirements (PCR):

Applicable to Fat and Salt Content Testing: The composite sample shall be prepared and analyzed in accordance with the latest edition of the Official Methods of Analysis of AOAC International (OMA) as cited in the PCR. If an AOAC method does not specify specific times, temperatures, or methodology for preparation of a sample, preparation of samples shall be as follows: The unopened pouches shall be gently warmed in a 140°F water bath for 15 minutes to melt fat adhering to the inside of the pouches. The pouches shall be composited in a Waring blender or equivalent.

E-3-A-4. Additional Quality Assurance Requirements for MRE Tuna

As indicated in the Packaging Requirements and Quality Assurance Provisions for Commercial Item Description (CID) A-A-20155, "Tuna, Canned or in Flexible Pouches" and CID A-A-20155, MRE and FSR pouched tuna shall be under contractor-paid origin inspection provided by the U.S. Department of Commerce (USDC) in accordance with USDC fees and charges. Alternatively, if pouched tuna production occurs at a facility producing MRE entree items under USDA/AMS inspection, or if determined to be in the best interest of the government, the MRE pouched tuna entrees shall be inspected by USDA/AMS under USDA/AMS fees and charges. The regulations, file codes, etc. of the respective agency are applicable to the contract in conjunction with the quality assurance requirements of the contract.

a. For each lot of tuna produced for offer to the government, finished product contractor testing and USDA verification testing for methyl mercury and histamine content shall be performed in accordance with the requirements, procedures, and testing cited in A-A-20155 and the current contractual documents.

b. Alternative testing procedure:

1. As an alternative to the methyl mercury and histamine testing procedures specified in A-A-20155 and with the consent of the contracting officer, end-item USDA verification testing for methylmercury and histamine for each lot may be performed by using a composite sample. The allowable levels for a composite test result shall be: Methylmercury content shall be less than or equal to 0.33 ppm, Histamine content shall be less than or equal to 13 ppm when using the Elisa method or less than or equal to 16 ppm when using the AOAC 977.13 method. If the contractor changes its source of tuna, this alternative will not apply until the consent of the contracting officer is given for the alternative testing of tuna derived from that new source of supply.

2. The composite sample shall be created from three individual sample pouches. Individually blend the contents of each individual pouch and then divide the contents of each individual pouch into two approximately equal portions. One portion of each pouch shall be used to create the composite sample. Each portion used to create the composite sample shall be of equal weight. The composite sample shall be divided into two equal portions, one portion to be tested for histamine and one portion to be tested for methylmercury. The remaining tuna in each of the three pouches shall be individually retained in the event a retest is necessary.

3. Analytical testing of the composite sample shall be in accordance with the following methods from the Official Methods of Analysis of the AOAC International:

Test	**Method**
Methylmercury	988.11
Histamine	977.13 or Elisa method Neogen Veratox® for Histamine (AOAC-RI No. 070703)

4. Composite Test Results: The test results for methylmercury shall be reported to the nearest 0.01 ppm, and histamine to the nearest 1 ppm.

a. If the analytical results for the composite sample are within the specified allowable levels cited in paragraph E-3-A-4,b,1, the lot will be considered acceptable.

b. If a composite sample analytical result is greater than any one of the allowable levels cited in paragraph E-3-A-4,b,1, testing will revert to analytical testing of each individual sample for the test and for the lot in question, using the AOAC 988.11 method for Methylmercury testing and the AOAC 977.13 method for Histamine testing, except as specified in paragraph E-3-A-4,b,4,c.

c. Any composite test result greater than the maximum allowable level for one individual sample shall be cause for rejection of the lot and retesting/reinspection/rework of the lot is not authorized. The maximum allowable level for one individual sample is cited in paragraph E-3-A-5.

5. Individual Test Results: Maximum allowable level for one individual sample shall be:

Methylmercury	Not more than 1.0 ppm
Histamine	Not more than 50 ppm

The test results for methylmercury shall be reported to the nearest 0.01 ppm, and histamine to the nearest 1 ppm.
Any individual test result greater than the maximum allowable level for one individual sample shall be cause for rejection of the lot and retesting/reinspection/rework of the lot is not authorized.

E-3-A-5. Additional Requirements for Entrées, Starches and Soups, and Fruits - Commercial Sterility

Thermally processed pouches shall be free of swelling or microbial activity when tested in accordance with the following commercial sterility test.

Commercial sterility test. Incubate filled, sealed and thermally processed pouches as follows:
Meat, poultry, fish and vegetables: Incubate at 95°F + 5°F for 10 days, unless otherwise specified by the inspection agency. 1/
Fruit: Incubate at 80°F + 5°F for 10 days. 1/

1/ Select a minimum of one pouch from each retort load. Select pouches from different areas within the retort. For a continuous cooking process, an inspection level of S-3 shall be used to establish sample size.

E-3-B. Quality Assurance Provisions and Packaging Requirements for Other Food Components

For other food components, when the finished product packager is the prime contractor (assembler), or a subcontractor, origin inspection shall be contractor paid USDA,AMS,FV,PPB inspection in accordance with DLAD clause 52.246-9023, except as specified in E-2-F and except for the following items: candy and chocolate confections, hot sauce, chewing gum, salt, coffee (CID-AA-20184), and sugar. The regulations, file codes, etc. of the respective inspection agency are applicable to the contract in conjunction with the quality assurance requirements of the contract. Optional contractor testing is provided by the alternate inspection requirements DLAD clause 52.246-9024. When permitted by the applicable food component specification, a Certificate of Conformance (COC) for ingredients shall be provided in accordance with FAR Clause 52.246-15. Compliance with applicable Performance-based Contract Requirements (PCR), Product Contract Requirements (PCR) or Commercial Item Description (CID) requirements will be determined by the contractor and by the GQAR on the finished product in accordance with the applicable provisions in the PCR, CID, solicitation, contract, and purchase order and their applicable Quality Assurance Provisions and Packaging Requirements.

End Item Testing. Compliance with applicable Performance-based Contract Requirements (PCR), Product Contract Requirements (PCR) or Commercial Item Description (CID) requirements will be determined by the contractor and by the GQAR on the finished product in accordance with the applicable provisions in the PCR, CID, solicitation, contract, and purchase order and their applicable Quality Assurance Provisions and Packaging Requirements. Regardless of the Government agency designated cognizance for the support of the Government's quality assurance requirements at the supplier’s production/assembly facility, a USDA laboratory will perform all Government verification testing. The contractor shall bear all expenses incident thereto, including costs of samples and all associated costs for preparation and mailing. Costs shall be assessed in accordance with the

Government laboratory testing charges for individual test characteristics and number of tests required by the specification or contract. A list of fees may be obtained from the appropriate USDA laboratory.

E-3-C. Quality Assurance Requirements for Bulk Packed CFM Accessory Items, Bulk Packed CFM Food Items, and Bulk Packed CFM Non-Food Items.

When the above items are procured as CFM, verification inspection by the Government may be performed at destination in accordance with origin requirements or the contractors QSP receipt inspection provisions and to include, at a minimum, an inspection for count, condition, and identity, the presence of any internal infestation or the presence of foreign material. In addition, the Government may inspect the manufacturer's product at destination by comparison with samples of the manufacturer's product selected from commercial distribution channels.

The supplies or services furnished under the contract shall be covered by the most favorable commercial warranties the contractor gives to any customer for such supplies or services and the rights and remedies provided therein are in addition to and do not limit any rights afforded to the Government by the Supply Warranty Clause 52.246-17.

Bulk packed, as used in this paragraph, means packing prior to finished product packaging.

E-3-D. Quality Assurance Requirements for Ration Supplement Flameless Heater, for Meal, Ready-to-eat (FRH):

(1.) In order to ensure delegation of authority for Government quality assurance support, the following information shall be provided to the Contracting Officer by the contractor after award of the contract and prior to start of production:

Name, address and point of contact of FRH manufacturer

(2.) The following information shall be provided to the contractor by the Contracting Officer at such time as the contractor furnishes the above information:

Name and address of Defense Contract Management Agency (DCMA)
having quality assurance cognizance at the FRH manufacturer's plant.

(3.) DCMA shall provide the quality assurance support for the contract on the behalf of the Government at the FRH manufacturer's plant. The contractor through their FRH manufacturer is responsible for arranging for the quality assurance support by DCMA. Contractor shall perform or have performed all examinations and tests indicated by the applicable specification(s).

(4.) When the FRH is procured as contractor furnished material, FAR Clause 52.246-2, FAR Clause 52.246-11, Higher Level Quality Requirements, Clause 52.246-9001, and Statistical Process Controls are applicable. The plans shall be prepared, submitted, reviewed, evaluated, and verified in accordance with the provisions cited in paragraphs E-1, above, except that the appropriate DCMA shall have cognizance for the support of the Government's quality assurance requirements. The regulations, file codes, etc. of the respective agency are applicable to the contract in conjunction with the quality assurance requirements of the contract. One copy of the FRH manufacturer's Higher Level Quality Systems Plan and SPC plan shall be submitted to DLA Troop Support - FTRAA and one copy of the plan shall be provided to the DCMAO QAR assigned to the FRH manufacturer's plant.

(5.) The particular quality assurance requirements cited in paragraphs E-1, E-2, E-3, E-4, and E-5, as applicable, are required for this item with exception of E-4-E and E-4-F.

E-3-E. Additional Sanitary Conditions Requirement for Dairy

For dairy component powders and freeze dehydrated dairy products (cocoa beverages, dairy shakes, puddings, flavored coffees, non-dairy creamer, granola with milk and blueberries, ice cream sandwich,

etc), all processing and packaging plant(s) and all plants providing dairy ingredients to the dairy processing plant(s) must be listed in the "Directory of Sanitarily Approved Food Establishments for Armed Forces Procurement", published by the U.S. Army Veterinary Command as cited in paragraph (1) of DLAD Clause 52.246-9044 SANITARY CONDITIONS (AUG 2008) as used in this solicitation. Suppliers also agree to inform the contracting officer immediately upon notification that a manufacturing plant is no longer sanitarily approved and/or delisted from another agency's listing, as indicated in paragraph (2) of DLAD Clause 52.246-9044 SANITARY CONDITIONS (AUG 2008). The contracting officer will also be notified when sanitary approval is regained and listing is reinstated.

E-3-F. Additional Quality Assurance Requirements for MRE Crackers

(A.) The following inspection criteria applies: Contractor-paid USDA origin inspection in accordance with solicitation/contract including DLAD clause 52.246-9023 (General Inspection Requirements), FAR Clause 52.246-15 (Certificate of Conformance) and DLAD clause 52.246-9024 (Optional Contractor Testing). The following PCR-C-037 paragraphs are applicable:

(1) At the cracker manufacturer when crackers are bulk packed: paragraphs E-A., Definitions; E-B.(2), Conformance inspection (product); E-5-A., Product examination; E-5-B.(2), Net weight, are required. Calcium and fat testing, required by E-5-B.(3) Analytical in paragraph (B.) below, may be performed by individual bulk lot testing.

(2) At the cracker manufacturer when crackers are unit packed: All Section E paragraphs are required, except paragraph E-5-B.(1), Self life.

(B.) When the end item crackers are packaged by the ration assembly contractor or at a unit packager other than the cracker manufacturer, the following PCR-C-037 paragraphs are applicable and inspections shall be conducted by the assembly contractor, subject to Government verification:

Paragraphs E-A., Definitions; E-B.(1), Product standard inspection; E-B.(2), Conformance inspection (packaging and packing); E-5-B.(3), Analytical; E-6-A.(1), Pouch material certification; E-6-A.(2), Pouch vacuum examination; E-6-A.(3), Fillled and sealed pouch examination; and E-6-A.(4), Seal testing. When calcium and fat testing, required by E-5-B.(3) Analytical, are performed by bulk lot, the calcium and fat content of the finished product lot shall be verfied by the Government QAR using the USDA certification for calcium and fat content of the bulk lot(s) used to make the finished product lot.

Paragraph E-5-A., Product examination, is required when requested by DLA Troop Support Contracting Officer.

(C.) Cracker shelf life. PCR-C-037 paragraph E-5-B.(1), Shelf life, is required for the ration assembler, subject to Government verification.

(D.) Cracker End Item Testing for moisture and pH. If the contractor does not want to perform end item testing on each finished lot (where paragraph E-5, B., (3) is required), the contractor shall select one of the following options and place such option in the QSP and shall not change the option until written permission is obtained from the Contracting Officer, or steps are previously included in the QSP.

(1) Crackers packaged within 45 days of production. The contractor shall request and provide the GQAR a Certificate of Analysis (COA) from their bulk cracker supplier and also a copy of their own COA if a verification test (for compliance with moisture and/or pH analytical requirements) is conducted by the contractor at receipt. Government testing and acceptance will be based on the bulk lot testing results if crackers packaged within 45 days of production. Government testing shall be contractor-paid USDA bulk lot testing at origin, however, as an alternative to contractor-paid USDA testing, the contractor may request that government bulk lot testing be performed on receipt by the Department of Defense. If the bulk crackers supplier's COA and/or the contractor's COA indicate(s)

noncompliance (applicable if the contractor conducts verification at receipt and results obtained are nonconforming), the Government reserves the right to verify the COA through actual testing by a Government laboratory. In the event that the Government detects irregularity in the contractor's testing system or the cracker producer's, the designated GQAR will withhold approval until Government laboratory test results show that product is conforming. The "Alternative Inspection Requirements for Selected Items" (DLAD clause 52.246-9024) shall apply. Government retesting will be performed at the Government laboratory where the original test in question was performed. USDA certification of bulk lot compliance for moisture and pH may be offered to assembly GQAR, in lieu of a COA from the bulk supplier, as contractor's verification of compliance.

(2) Crackers packaged within 90 days of production. The contractor shall request and provide the GQAR a copy of the Certificate of Analysis (COA) from their bulk supplier and also a copy of their own COA if a verification test (for compliance with moisture and/or pH analytical requirements) is conducted by the contractor at receipt. Government testing and acceptance shall be conducted on the end item filled and sealed cracker lot packaged by the contractor (under this option the crackers shall be packaged within 90 days of the bulk lot date of production). If the cracker supplier's COA and/or the contractor's COA indicates noncompliance (applicable if the contractor conducts verification at receipt and results obtained are nonconforming), the Government reserves the right to verify the COA through actual testing by a Government laboratory. In the event that the Government detects irregularity in the contractor's testing system or the cracker producer's, the designated GQAR will withhold approval until Government laboratory test results show that product is conforming. The "Alternative Inspection Requirements for Selected Items" (DLAD clause 52.246-9024) shall apply. Government retesting will be performed at the Government laboratory where the original test in question was performed. USDA certification of bulk lot compliance for moisture and pH may be offered to assembly GQAR, in lieu of a COA from the bulk supplier, as contractor's verification of compliance if no contractor verification testing is conducted at receipt.

(E.) Bulk lot cracker supplier test results, USDA test results, and contractor test results shall be provided to DLA Troop Support - FTSB.

E-3-G. End Item Testing. Compliance with applicable Performance-based Contract Requirements (PCR), Product Contract Requirements (PCR) or Commercial Item Description (CID) requirements will be determined by the contractor and by the GQAR on the finished product in accordance with the applicable provisions in the PCR, CID, solicitation, contract, and purchase order and their applicable Quality Assurance Provisions and Packaging Requirements. Regardless of the Government agency designated cognizance for the support of the Government's quality assurance requirements at the supplier's production/assembly facility, a USDA laboratory will perform all Government verification testing. The contractor shall bear all expenses incident thereto, including costs of samples and all associated costs for preparation and mailing. Costs shall be assessed in accordance with the Government laboratory testing charges for individual test characteristics and number of tests required by the specification or contract. A list of fees may be obtained from the appropriate USDA laboratory.

E-4. Quality Assurance Requirements for Ration Assembler, Ration Component Production Plants and Ration Sub Assembly and Assembly Plants.

E-4-A. Packaging and Packing Materials

Packaging components (e.g., fiberboard shipping boxes, cartons, rollstock, preformed pouches, packets, accessory and menu sub assembly pack bags, material & menu bags, strapping materials,

fiberboard caps, adhesive, tape, etc.) are subject to the Certificate of Conformance FAR Clause 52.246-15. The Government QAR shall have the responsibility for verifying COC's as necessary. Any inspections required by the specifications may be performed by the Government to assure compliance with the specifications. FAR Clause 52.246-15 shall also apply to bond strength tests on retort pouches.

E-4-B. General Inspection (Examination/Testing) Requirements

(A.) When contractor determines as a result of his inspection(s) or QSP, or is informed by the QAR as a result of verification inspection, that the supplies do not conform to contractual requirements, he has the following alternatives:

1. Produce and inspect a new lot.
2. Screen or rework and reoffer conforming supplies (provided screening or reworking is not detrimental to the product and does not conflict with other requirements, e.g. time, temperature, etc.) See "Rework of Nonconforming Product Pre or Post Acceptance" for applicable situations.
3. Request the Contracting Officer to consider acceptance of the nonconforming supplies in accordance with paragraph "Request for Rework, Request for Waiver, Request for Deviation, or Reinspection of Nonconforming Supplies".
4. When valid technical reason(s) exist for suspecting the verity of the inspection results, request the Contracting Officer's permission to reinspect the supplies without screening or reworking. The request must be made in writing in accordance with paragraph "Request for Rework, Request for Waiver, Request for Deviation, or Reinspection of Nonconforming Supplies". Any lot with one or more valid critical/major A defect(s) will not be reinspected without reworking or screening of all units. Examples of valid technical reasons are:

A. After finding the lot nonconforming for net weight, it is discovered that the scales used for the inspection were out of adjustment or

B. After finding the lot nonconforming for a chemical test characteristic, it is discovered that a chemical used in the analysis has deteriorated or had not been properly prepared.

(B.) The contractor may petition the Government (through the Contracting Officer) for skip lot or a reduction in verification inspection at such time that the contractor believes his quality program is fully acceptable and reliable. There will be no "skip lot" or "reduced" inspection option for critical defects.

E-4-C. Government verification inspection and testing (conducted by the GQAR or Government laboratory) shall be withheld, at a minimum, until the contractor's completed inspection results are presented to the Government's Quality Assurance Representative (GQAR). Unless otherwise authorized, in writing, by the contracting officer, the GQAR and/or Government laboratory shall not perform Government verification inspection/testing unless the contractor's lot submittal package (inspection/test results-including analytical testing) provided to the GQAR indicates conformance to ALL contractual requirements

E-4-D. Operational Ration Component Lot Number and Lot Inspection

The component lot number for thermostabilized (retorted) products packaged in flexible pouches shall be defined as the Julian lot number assigned at the origin manufacturer's plant and the inspection lot shall include only product produced in one work-shift. For products packaged in tray pack containers (metal/poly) and other products (including the FRH and final assembled lots), a lot number is defined as the quantity of finished product produced/assembled within a production day (Julian date) and the inspection lot shall include product produced in no more than one production/assembly day.

The Government QAR reserves the right to separate an inspection lot into smaller inspection lots. The Sample for Government and contractor's end item lot inspection may be drawn after all units comprising the lot have been produced or samples may be drawn during production of the lot. If stratified sampling is utilized (drawing sub-samples from each sub-lot/sub-code during production of the lot), the sub-samples must be drawn at random from the sub-lot and not inspected until all the sub-samples are combined to makeup the complete sample for the applicable lot size (the formation of the lot and lot size is defined as the manner in which the lot is to be presented for Government end item verification inspection).

E-4-E. Production Standard Replenishment for Food Items:

Acceptable PDMs will be used as production standards by both the Contractor and the Government. The approval of any PDM will not constitute waiver of the requirement that all delivered product must meet all other contractual requirements such as but not limited to analytical requirements, physical requirements, microbiological requirements, and/or performance requirements.

Every 12 months, the Government Quality Assurance Representative (GQAR) will randomly select 32 replenishment samples for Natick and 70 replenishment samples for the Government's supply at origin from a lot accepted by the Government for all contractual requirements. The Contractor will be responsible for shipment to Natick. This replenishment may occur earlier if necessary to ensure an adequate supply of PDM samples. The Contractor will also use samples from this same lot as the production standard."

Replenishment sample lots will be contractor and Government tested for compliance with all applicable analytical, nutrient, moisture, and microbiological requirements.

E-4-F. Periodic Review Samples

All food components that are inspected by USDA/AMS will be subject to periodic review sampling and examination/testing during contract production in accordance with the following criteria: For each calendar month of production, the USDA/AMS inspector will randomly select twelve sample units from a conforming lot of each item (i.e., each type, flavor, etc.) produced and inspected for product examination by USDA/AMS. As instructed by DLA Troop Support, the USDA/AMS inspector shall ship nine of the samples, at the contractor's expense, to the addresses below, once per month:

Six samples selected by USDA/AMS will be sent to:
HEAD, DEFENSE CONTRACT INSPECTION SECTION
USDA,AMS,FFV,PPB (202) 720-5021
1400 INDEPENDENCE AVE. SW
STOP 0247
WASHINGTON, DC 20250-0247

Three samples selected by USDA/AMS will be sent to:
US ARMY RESEARCH, DEVELOPMENT & ENGINEERING COMMAND
NATICK SOLDIER RESEARCH, DEVELOPMENT & ENGINEERING CENTER
ATTN: RDNS-CFF
15 KANSAS STREET
NATICK, MA 01760-5056

The USDA/AMS inspector shall retain three samples for standby use, and return them to the contractor if not need.

E-4-G. Alternative Skip-Lot End-Item Inspection Requirements for Government End-Item Verification Inspections for Operational Rations.

The "Procedures for Alternative Skip-Lot End Item Inspection Requirements for Government End Item Verification Inspections for Operational Rations", dated March 2001, are applicable to current and future contracts. The switching procedures cited in ANSI/ASQC Z1.4, Sampling Procedures and Tables for Inspection and Attributes shall not be used for Government verification inspections. For products requiring a drained weight examination, the following is also required: The contractor shall provide the Government Quality Assurance Representative (GQAR) a copy of the current production standard (PDM/First Article) formula (including ratios of ingredients), and formulation records for each production lot submitted for Government end item verification inspection. The GQAR shall initiate skip-lot inspection based on Government verification inspections results of each product and notification that the contractor's Quality System Plan (QSP) was rated acceptable by DLA Troop Support - FTSB. The Government verification inspection may be further decreased (e.g., skip-lot inspection frequency 1 in 6, 1 in 10, etc.) by the Contracting Officer if he/she determines that this is in the best interest of the Government or he/she may discontinue skip-lot inspection for Government verification inspection if it is determined that skip lot is not in the best Interest of the Government.

The sampling plans switching procedures cited in ANSI/ASQC Z1.4, Sampling Procedures and Tables for Inspection and Attributes, are authorized to be used only by the contractors during the performance of contractor's end item verification inspections. Producers using the switching procedures, cited in ANSI/ASQC Z1.4, during the performance of their end item inspections must train personnel and follow **all of the switching rules** cited in the standard. As indicated in the standard, the sampling scheme is a combination of sampling plans with switching procedures, and each sampling plan has its own set of rules by which a lot is to be inspected and accepted or rejected. Samples may be drawn after all units comprising the lot have been produced or samples may be drawn during production of the lot. However, for those contractors that are using stratified sampling (drawing subsamples from each sublot during production of the lot), the subsamples must be drawn at random from the sublot and not inspected until all the subsamples are combined to make-up the complete sample for the applicable lot size (the formation of the lot and lot size is defined as the manner in which the lot is to be presented for Government end item verification inspection in accordance with paragraph "Operational Ration Component Lot Numbers"). All other inspection procedures must be reviewed by the GQAR, included in the QSP, and approved by the Contracting Officer. The producer's end item verification inspection results must be well documented and the GQAR must be informed in advance of the specific switching procedure (normal, tightened, reduced) being utilized for each product qualified under the standard.

E-4-H. Rework of Nonconforming Product Pre or Post Acceptance

Rework of Nonconforming Product: The Government QAR must be informed and provided documentation of all rework results when product is presented for Government verification inspection or prior to Government inspection as indicated below.

A. Corrective Action (Rework/Screen Inspections) Taken Prior to Government Inspection (Receipt, In-Process And End-Item Inspections): Unless otherwise specified below, all reworks and screening inspections conducted prior to the initial Government inspection of the lot do not require approval from the Government. Although the GQAR must be informed of all reworks, the contractor is

not required to obtain approval to take corrective and preventive action as deemed necessary to ensure compliance with contractual requirements.

NOTE: All requests for rework shall be accompanied with a comprehensive rework plan. The rework plan will include rational information and data that supports the rework plan and ensures the elimination of nonconforming material from the lot. When a contractor determines as a result of his end item inspection(s) or QSP that supplies do not conform to contractual requirements and the supplies cannot be reworked (such as drained weight, viscosity, piece size, residual air, etc), he has the alternative to request the Contracting Officer for a waiver for the nonconforming requirement. If the Contracting Officer approves the waiver request for a specific requirement, the written waiver approval shall be provided to the GQAR when the supplies are presented for Government Verification Inspection (the skip-lot inspection does not apply in this case). The GQAR shall only inspect the supplies for compliance with all requirements of the contract, except the waived requirement. The Contracting Officer, in special circumstances, may request nonconforming supplies to be inspected by the GQAR, after the waiver for the nonconforming requirement has been provisionally approved, to determine severity of nonconformance only. Due to the type of statistical sampling cited in the contract, under no circumstances shall a lot found nonconforming by the contractor be inspected by the GQAR to determine conformance to a requirement that has previously been established as nonconforming by the contractor's inspection. After any lot's failure or rework, if the lot is reinspected, it will be both Contractor and Government inspected at the next higher sample size.

B. The Following Reworks Must Be Coordinated with the Supervisory GQAR and, As Required, Approved by the Applicable DLA Troop Support-FTR Office.

1. **Insect or Rodent Infestation/Contamination:** Reworks must be approved by FTR/FTSB.
2. **Food Safety and Foreign Material:**

(a) All corrective actions performed on product due to foreign material and/or processed/ unprocessed container mix-ups must be approved by FTR.

(b) Thermal process deviations or deviations from the preparation, formulation or critical factors cited in the approved process schedule must be accompanied by a detailed letter from the plant's Processing Authority. The involved subcode(s), the deviation, and the disposition of the product shall be clearly identified when the complete lot is presented for Government end item verification inspection. If the producer fails to provide enough information/data in the case of a deviation, the GQAR shall contact FTR for approval to proceed with the Government end item verification inspection.

(c) Retesting/reinspection/rework of product that tested positive for food borne pathogens (salmonella, e. coli, etc.) is not authorized.

(d) These requirements are in addition to applicable Code of Federal Regulations or other regulatory requirements (USDA-FSIS, FDA).

NOTE: Deviations (that occur during or prior to the production of a product) from specific preparation/ formulation/ingredient requirements cited in the specifications shall be submitted as a request for product deviation and must be approved and coordinated with the Specification Preparing Activity (Natick) through the applicable contracting officer.

3. **Container Integrity Defects:** All reworks due to container integrity defects (critical defects only) noted during the producer's end item inspection, the Government's final lot end item verification inspection, the Government's or assembler's receipt inspection, or noted when the established action number/level (as cited in the contractor's QSP) is exceeded during the in-process assembly operation must be approved by the applicable contracting officer, unless a 100% container rework of the entire lot is conducted at source or at the assembler. All containers exhibiting the same or other container

integrity defects must be removed during the 100% container rework and noted on the rework paperwork. Reworked lots will be inspected or re-inspected, as applicable, by the GQAR at the location of the rework using the next larger sample size (for example, from 200 samples to 315, or if a second rework, from 315 samples to 500 samples). Rework results must be included with other paperwork when the lot is presented for Government end item verification inspection.

4. Second Time Reworks: All second time reworks must be approved by the applicable FTR contracting officer.

5. Nonconformances Noted During Government Inspection for End Item Compliance: All rework requests submitted for defects noted during Government inspection for end item compliance must be approved by the applicable contracting officer, unless exempted under paragraph 3 above.

6. For reworks requiring the Government's approval, the contractor may submit a standard rework procedure (SRP), for certain defects, under the contractor's documented QSP section XII - Corrective and Preventive Action Program. The SRPs must be specific and these must be evaluated by DLA Troop Support-FTR, FTSB, and approved by the applicable contracting officer.

7. If the contractor elects to rework nonconforming product, it must be reworked and reoffered within 30 days from date of initial rejection.

8. All requests for rework shall be accompanied with a comprehensive rework plan. The rework plan will include rational information and data that supports the rework plan and ensures the elimination of nonconforming material from the lot. See “Request for Rework, Request for Waiver, Request for Deviation, or Reinspection of Nonconforming Supplies”. After any lot’s failure or rework, if the lot is reinspected, it will be both Contractor and Government inspected at the next higher sample size.

C. Contractor's Quality History:

1. Effectiveness of corrective actions (rework/screen inspections) taken by the contractor prior to Government end item verification inspection (receipt, in-process and contractor's end-item inspections) will be determined by the results of the end item verification inspection performed by the GQAR. **Corrective actions taken to ensure compliance with the contractual requirements prior to the Government end item verification inspection will not be counted against the contractor's quality history**. If product is found conforming during the Government end item verification inspection, the corrective action will be determined to have been effective. However, all requests for waivers and product deviations will be counted.

2. If product is found nonconforming during the Government end item verification inspection following contractor corrective action for the same defect (or defect category in case of critical pouch defects) for which the contractor took a corrective action, the corrective action will be determined to have been ineffective. In addition to any action taken, the contractor must reevaluate their documented QSP and/or the implemented corrective and preventive action program by an internal audit and results must be submitted to FTSB (Quality Systems Auditors). **All corrective actions (rework/screening inspections, etc.) taken by the contractor due to a Government end item verification inspection rejection will be documented in the contractor's quality history records.**

E-4-I. Request for Rework, Request for Waiver, Request for Deviation, or Reinspection of Nonconforming Supplies

(A.) When the requirements cited in the section of this solicitation entitled “Rework Of Product Pre or Post Acceptance” require that a written request for deviation, waiver, rework, or reinspection must be furnished, as appropriate, to the Contracting Officer and cognizant Government QAR, that request shall at a minimum contain the following:

1. Contractor's name and address.
2. Contract number, lot number(s), and quantity.
3. Item nomenclature and NSN, whether a component or end item.
4. Specification number, table/paragraph number, sample size, AC/REJ number(s), defect number(s), number of defects. Identify the pouch codes of defective units.
5. Classification of defects: Critical _____ Major _____ Minor _____
6. Cause of nonconformance or deviation, and corrective and preventive action.
   a) State the root cause of the deficiency.
   b) State the corrective action and the preventive action contractor has taken/will take to preclude recurrence.
   c) If preventive action is not possible, state why.
7. If deviation/nonconformance is of a recurring nature, the frequency of occurrence and date/contract/lot number of last occurrence.
8. Effect on cost/price.
9. Effect on delivery schedule.
10. Full justification for request for deviation, waiver, rework or reinspection.
11. Submit in-process data (MPC,SPC) and contractor and Government end-item records for the involved lot(s). Submit retort records, copy of process schedule and letter from Processing Authority if a process deviation.
12. Applicable to the defect found or class of defects for critical defects, identify the situations where the lot exceeded control limits (out-of-control, exceeded action level or number) according to in-process records (MPC, SPC), and identify the corrective actions taken for each instance.

NOTE: All requests for rework shall be accompanied with a comprehensive rework plan. The rework plan will include rational information and data that supports the rework plan and ensures the elimination of nonconforming material from the lot. After any lot's failure or rework, if the lot is reinspected, it will be both Contractor and Government inspected at the next higher sample size.

(B.) When a valid technical reason for reinspection is offered and permission is granted by the PCO, the contractor shall take corrective action to eliminate the cause of the inspection revealed failure; reinspect the nonreworked lot after taking the corrective action, and evaluate the results of the initial inspection and the reinspection by means of recognized statistical methods.

1. If the statistical tests reveal no significant difference between the results of the two inspections, acceptability will be based on reinspection results. A significant difference is one that is real and not due to chance variation. Statistically, a difference which has a 0.05 probability of occurring by chance alone is usually considered a significant difference.
2. If such statistical tests reveal no significant difference between the results of the two inspections, both results will be reported to the Contracting Officer.

   A. The results of the two inspections will be averaged and acceptability will be based on whether the resulting average meets the requirement, when the requirement is an average (variable) requirement.

   B. The results of the initial (original) inspection will be the basis for the acceptability decision when the requirement is a unit (attribute) requirement.

E-4-J. Reliability Conditions

(A.) The Government may perform verification inspection (examination, testing or both) to assure that the inspection performed or certificates furnished by the contractor are reliable. Initially, the amount of verification inspection may equal the amount of inspection performed by the contractor. It is the intent of the Government to be able to rely on the contractor so that the amount of verification may be reduced

accordingly. In the event the Government determines by means of verification inspection, surveillance of the contractor's inspection activity, or the submission by the contractor to the Government of nonconforming supplies that the contractor's inspection results or certificates from any plant are not reliable, the Government reserves the right to increase the rate or amount of verification inspection to and including full lot-by-lot inspection and to charge the contractor for the costs incurred for any or all Government examinations and tests performed on supplies from the plant/plants determined to be unreliable after such time as the contractor is advised in writing of the particular inspection concerning which his unreliability is established. In addition, the Government reserves the right to sample and inspect for compliance with contract requirements all supplies produced for the Government remaining in the contractor's facilities at the time of notification in an other than reliable status, even though said supplies may have been produced prior to receipt of notification. It is to be especially noted that the Government is contracting for a complete and reliable inspection system as well as a product conforming to all requirements of the contractual document(s). When any element of the contractor inspection system (a particular test or examination of the end item or component) has been determined to be unreliable, the Government reserves the right to consider the inspection system as a whole unreliable, and to return to full lot-by-lot verification (and charge therefore) for each and every examination and test. Examination and testing by the Government and charges to the contractor will continue until such time as the contractor's reliability is again established to the satisfaction of the Contracting Officer. Evaluation of contractor's examination results and review of test results will be accomplished by the Government Quality Assurance Representative (GQAR). Final evaluation of contractor's test results will be accomplished by the applicable DLA Troop Support Operational Rations Office and DLA Troop Support-FTSB, Subsistence Supplier Operations Directorate.

(B.) The GQAR may perform verification inspection on any of the lots presented by the contractor to determine if the inspection results reported by the contractor are a reliable indication of product quality. Verification inspection results may be compared with product acceptance criteria set forth in the contract and/or with contractor inspection results for the purpose of determining if verification inspection performed by the GQAR may be reduced. This reduction in Government verification inspection may be effected through less frequent inspection (skip lot/modified skip lot), reduced severity of inspection, or both. Contracting Officer's approval must be section obtained before switching the degree of inspection severity to reduced inspection even though all criteria have been met. .

(C.) Unless otherwise specified in the contract, verification inspection performed by the GQAR will be in accordance with the specification Quality Assurance Provisions regardless of any approved alternative procedures employed by the contractor.

(D.) Unless otherwise specified, when the contractor inspection results have been determined to be unreliable, the next determination as to reliability will be made:

1. For examination characteristics. After the production and examination of not less than three or more than five lots.
2. For test characteristics. After six day's production or after the number of days necessary to produce and test six inspection lots, whichever is greater.

NOTE: During the period the contractor's test system is considered unreliable, supplies will be accepted or rejected on the basis of Government laboratory test results.

3. For Certificate of Conformance. After two inspection lots of component items, except that return to a reliable status will be based on conformance of a component item to requirements if inspection results are not submitted by the contractor.

(E.) After a contractor has been notified that his inspection system has been found to be unreliable, the status or unreliability will continue until the Government notifies the contractor that a reevaluation has been completed and the results indicate that the inspection system is considered as regaining a reliable status. In addition to the requirements in the immediately preceding sub-paragraphs (D) 1, 2, or 3, time will be required by the Government to review the contractor's results by the evaluators, complete

verification inspection, perform statistical analysis, and to notify the contractor. The contractor will be charged for costs incurred by the Government for inspecting lots (including costs associated with sampling) used for evaluating reestablishment of an acceptable inspection system status.
(F.) Whenever considered necessary as an aid in determining reliability of contractor inspection, the Government will determine, by the use of recognized statistical methods, if there is a significant difference between inspection results furnished by the contractor and the results of verification inspection.
(G.) Supplies, which have been found nonconforming by the contractor, may be subjected to special Government verification examination of the lot or lots in question. The verification examination results for each such lot so selected will be compared with the contractor's results using the lot-by-lot comparability determination procedure for reliability only and shall not be used for acceptance or rejection of production lots.
(H.) In the event the Government elects not to perform verification inspection prior to delivery and acceptance, payment will not be delayed provided the contractor's inspection results indicate the end item and components (including packaging, unitization, packing, labeling and marking materials) conform to the specification requirements, and further provided that said results are presented in the manner prescribed herein.
(I.) Normally, verification inspection will be performed on a stationary lot basis, regardless of physical location, at any time prior to acceptance. Warehousing charges for labor, reconditioning, and any other such costs incident to sampling for examination and/or testing will be borne by the contractor, except when examination is performed at a point other than the premises of the contractor, sub-contractor or contractor's freezer or warehouse.
(J.) Conformance of supplies, or parts thereof, will be determined in accordance with the applicable specification tolerances, acceptable quality levels and sampling procedures contained in the contract except as provided herein. at destination, the original inspection lots need not be reconstituted. For sampling purposes, supplies delivered under the contract may be grouped to form lots. The size of the sample will be determined by the sampling procedures specified in the contract for the quantity of supplies on which action is proposed. Whenever the contract does not provide criteria to determine the number of sample units, the number of containers selected for appropriate number of sample units, the number of containers selected for sampling will be the square root of the number of containers in the lot. Frozen product may be inspected for determination of compliance with all terms of the contract. If necessary, the product or samples, as appropriate, may be defrosted to the extent required to accomplish this inspection. At origin, the contractor will employ a procedure for identifying the inspection status of material before, during, and after processing.
(K.) The contractor's inspection system will be considered unreliable if a statistical comparison of contractor and Government inspection results indicates noncomparability. The noncomparable status will serve to notify the contractor of the significant disparity between the Government verification results and the contractor's results without either result indicating nonconformance. The Contracting Officer and/or GQAR will notify the contractor when his inspection system is considered unreliable and change inspection system status to unreliable. The Contracting Officer and/or GQAR will notify the contractor of any change in the inspection system status and of all reevaluations, whether or not a change in the inspection system is applicable.
(L.) The contractor's inspection system will be considered unreliable when the Government inspection results indicate nonconforming product and a significant difference is observed between the contractor and verification inspection results. The Contracting Officer and/or GQAR will notify the contractor of any change in the inspection system status and of all reevaluations, whether or not a change in the inspection system is applicable.
(M.) Standby inspection samples. The Government reserves the right to withdraw and hold, for inspection purposes, standby samples of components or finished products or both. Samples not used will be returned to the contractor.
(N.) The contractor may be liable for certain inspection costs for examination or tests (for end item or components, separately) performed by the Government.
(O.) When the contractor is liable for costs, as defined by this contract, the following will apply:

1. The GQAR will notify the contractor in writing when the contractor's inspection system is determined to be unreliable. A copy of this letter containing the reason(s) for such determination will be forwarded through the appropriate CQAE(s) to the PCO(s). During the period of unreliability, the GQAR will submit weekly reports of applicable inspection costs, including travel expenses, through the CQAE(s) to the PCO(s) for review and collection. Inspection costs will be computed at the rate of $35.00 per hour. Hours will be computed based on total hours for all inspectors used to perform inspection (i.e., three inspectors at three hours each = nine hours total). Actual travel expenses will be determined in accordance with applicable travel regulations. Upon reestablishment of reliability the GQAR will notify the contractor in writing and submit a copy of this letter, along with a final report of examination costs, through the CQAE(s) to the PCO(s). The contractor may appeal the assessment of examination costs in writing to the PCO stating full justification to refuse these costs. The PCO will provide a written decision on the appeal to the contractor. Assessment of examination costs will be based upon the dates of GQAR notification to the contractor.
2. The contracting officer will notify the contractor in writing when the contractor's test system is determined to be unreliable. The GQAR and the DLA Troop Support Quality Assurance will report applicable costs/charges related to Government sampling and testing to the contracting officer for collection.
3. Costs devoted to actual travel time will be computed at the current authorized hourly rate, computed to the nearest quarterly hour increment.
4. Laboratory testing costs will be assessed at cost.
5. Warehouse cost. Warehouse labor costs as reported by destination will be assessed at cost.
6. Miscellaneous expenses. Related expenses which can be reasonably computed will be assessed at actual cost.
7. The contractor shall be liable for Government costs (i.e., man- hours, travel, per diem, administration, etc.) incurred as a result of the failure of the contractor to notify the inspection service of change(s) in production schedule. Costs will be computed and reported by the GQAR as detailed above.

E-4-K. Shipping and Commingling of Lots

E-4-K-1. In order to facilitate lot traceability at the assembler's plant, the following is required (GFM and CFM):

(1.) Lots shall be shipped on a first produced (and accepted) first out basis. No product shall be older than three months at time of shipments, except when a product at the manufacturer's plant is pending disposition instructions and/or action (request for waiver, deviation, rework, reinspection, etc) and/or as authorized by the Contracting Officer.

(2.) Each shipping case shall normally contain only one manufacturer's lot. If a partial shipping case remains at the end of the production day, dunnage shall be used to fill the remainder of the case and the outside of the case shall be marked indicating the number of pouches/items within. See the following sub-paragraph entitled “Mixed Code Lots” for exception.

(3.) Each unit load shall contain only one production lot, as a rule. However, when a partial unit load remains at the end of a production day, the contractor is permitted to complete the unit load with another lot's material. In this instance a unit load may consist of two lots to facilitate shipment.

(4.) When two lots are incorporated on one pallet, the lots shall be distinctly separated by the use of paper or other material suitable for this purpose. When this occurs, the contractor shall affix a unit load placard on two adjacent sides of the unit load, identifying each lot number on the load and the quantities of pouches/items within each lot.

(5.) Assemblers shall assemble one (1) component lot at a time, i. e., one (1) component lot shall be used at each assembly line until it becomes necessary to place another lot of the same component on the assembly line to maintain assembly flow.
(6.) Lot numbers and corresponding lot quantities shall be included on the shipping/receiving documentation, e.g. DD Form 250, WAWF Receiving Report. Thermostabilized items, water activity stabilized items and cheese spread shall also cite subcodes delivered.

E-4-K-2. Mixed Code Lots
In addition to the above, the following requirements shall apply to the shipment of "mixed code lots":
(1.) A "mixed code lot" is defined as a lot consisting of small quantities of components representing different lots. These components usually accumulate as the result of sampling for the purposes of incubation, USDA standby samples or for similar reasons.
(2.) Unit loads containing mixed code lots shall be identified by the use of unit load placards. The placards shall list all the lots and the quantities of pouches/items within each lot contained on the pallet. The placards shall be affixed on two adjacent sides of the unit load. Lot numbers and corresponding lot quantities shall also be included on the corresponding shipping/receiving documentation, e.g. DD Form 250, WAWF Receiving Report.
(3.) Mixed code lots shall be periodically shipped to the assembler(s). Mixed code lots shall be shipped only when an entire unit load is completed of that single item or on a quarterly basis, whichever occurs first. Mixed code lot shipments may be less than a full unit load.
(4.) When the quantity of components from one production lot is less than that needed to fill a normal shipping container, product from more than one production lot may be used to fill a case. However, product from one production lot may not be used to partially fill more than one case. When a shipping case contains product from more than one production lot, a placard will be placed on the outside of the case that indicates the lot number and quantity for each lot.

E-4-K-3. Split Lots
Origin manufacturers have the choice of shipping an entire shift's production equaling one lot as follows:
(1) The entire lot shall be shipped to only one assembler and received in accordance with the applicable Quality Systems Plan.
(2) Whole lots may be split in two (2) portions for separate shipments.
- (a) Split lot shipments may be shipped to more than one (1) assembler but not more than two (2) assemblers.
- (b) No lot shall be split into more than two (2) portions and splitting individual subcodes is prohibited.
- (c) Prior to splitting the lot for separate shipments, the lot shall be contractor and USDA inspected as one homogeneous lot, when origin USDA inspection is required.
- (d) The origin manufacturer assumes full liability for both portions of a split lot shipment. Therefore, in the event of a defect determination, recall, product investigations, and/or other negative findings, both portions of the lot will be representative of the entire homogeneous lot and any action taken with regard to one portion will be taken with regard to the other portion, regardless of where the product was assembled.
- (e) Associated lot shipping documentation will reflect split lot status, original lot quantities, and receipt inspection results.
- (f) Both portions of all split lots will be stored in approved facilities only.

E-5. FAR and DLAD Clauses

NOTE: Where "DD Form 250, Material Inspection Receiving Report (MIRR)", "DD Form 250 (MIRR)", "DD Form 250", etc., is cited in the FAR and DLAD Clauses contained in this section, read the citation as "DD Form 250, Material Inspection Receiving Report (MIRR) or Wide Area Work Flow Receiving Report", as applicable.

52.246-9039 REMOVAL OF GOVERNMENT IDENTIFICATION FROM NON-ACCEPTED SUPPLIES (APR 2008) DLAD

The contractor shall remove or obliterate from a rejected end item and its packing and packaging, any marking, symbol, or other representation that the end item or any part of it has been produced or manufactured for the United states government. Removal or obliteration shall be accomplished prior to any donation, sale, or disposal in commercial channels. The contractor, in making disposition in commercial channels of rejected supplies, is responsible for compliance with requirements of the Federal Trade Commission Act (15 USC 45 et seq) and the Federal Food, Drug and Cosmetic Act (21 USC 301 et seq), as well as other federal or state laws and regulations promulgated pursuant thereto.

52.246-9023 GENERAL INSPECTION REQUIREMENTS (APR 2008) – DLAD

(a) Inspection.

(1) The Contractor shall employ the services of the U.S. Department of Agriculture (USDA), Grain Inspection, Packers and Stockyard Administration (GIPSA) or Agricultural Marketing Service (AMS) or U.S. Department of Commerce (USDC), National Marine Fisheries Service (NMFS) to accomplish origin inspection (examination and testing) and sampling as required herein and in the applicable commodity specifications. The Contractor shall bear all expenses incident thereto, including costs of samples and all associated costs for preparation and mailing. Costs shall be assessed in accordance with the Government laboratory testing charges for individual test characteristics and number of tests required by the specification or contract. A list of fees may be obtained from the appropriate inspection activity. The Contractor shall furnish the Government grader/inspector a copy of the complete contract and supporting contractual documents (i.e., individual solicitation, contract modifications, waivers, and referenced specifications). Offerors may contact the appropriate Government office to discuss inspection procedures prior to submitting offers; however, nothing provided thereby shall be construed to alter the applicable specification in any manner or to reduce the responsibility of Contractor to comply with such specifications.

(2) The Contractor shall take action to correct or replace nonconforming supplies.

(3) The Government will perform an inspection at destination for identity, condition and quantity. If there is evidence that the supplies do not conform with contract requirements, the inspector shall report the findings of his inspection to the appropriate DLA Troop Support office (Operational Rations Business Unit, Food Services Business Unit, Produce Business Unit, Product Services Office, etc.). The applicable DLA Troop Support office shall report the findings to the Contracting Officer or the Ordering Officer, who shall in turn notify the Contractor.

(4) Supplies will be rejected when any evidence of insect activity (live or dead in any stage of development) or rodent activity/contamination is found in or on product, packaging, packing or unitization.

(5) Nonconforming supplies rejected at origin will not normally be accepted by the Government. However, the Contractor may elect to petition the Contracting Officer in writing to grant a waiver of the contract requirements for which supplies have been found nonconforming, and to accept the supplies "as is" with appropriate price consideration.

(6) The Contractor shall furnish all inspection gauges, instruments, scales, tools or other material required by the designated Government inspection activity to complete the necessary inspection. The Government inspector will insure that the Contractor has had such gauges, instruments, scales, tools, or other material required to complete inspection properly calibrated and, if necessary, certified. When required by the contract/solicitation the Government inspector will collect insect specimens from plant production and storage areas and submit the specimens to the nearest military entomological laboratory for identification. When the collection of insects is required, the Contractor shall be responsible for supplying and installing specified insect monitoring devices required to accomplish this task.

(b) Standby Test Samples.

The Government reserves the right to withdraw and hold standby samples of components or finished products or both (the quantity of which shall be not more than twice that required by the specification) for inspection purposes. Samples not used will be returned to the Contractor.

(c) USDA and USDC Certificates.

(1) Inspection by USDA, AMS, Fruit and Vegetable Division, Poultry Division or Dairy Division: When DD Form 250, Material Inspection Receiving Report (MIRR), is not used, the Contractor shall obtain official USDA inspection certificate, which shall:

(i) Contain the following statement in the grade section of the certificate:

(A) Supplies listed hereon conform to all quality requirements of the contract.

(B) Container condition meets all requirements of the contract.

(C) Visual examination indicates conformance to packaging, packing, unitization, labeling and marking requirements of the contract.

(ii) Indicate that supplies shipped are those inspected. This may be satisfied by means of one of the following:

(A) Each primary container must be embossed, stamped or stenciled with a code mark prior to inspection, which corresponds with the code marks listed on the USDA grade certificate.

(B) The USDA grade certificate bears a statement that all of the shipping containers comprising the inspection lot have been stamped with the official USDA stamp impression.

(C) The USDA certificate of loading, if issued, bears a cross-reference to the applicable USDA inspection document.

(iii) Indicate that the contractor has furnished a certificate of conformance for packaging, packing, labeling, marking and unitization materials.

(iv) Indicate the random samples of packaging, packing, labeling, marking and unitization materials, where applicable, have been selected by the inspector for forwarding to DLA Analytical Laboratory, 700 Robbins Avenue, Philadelphia, PA 19111 in accordance with DLA Troop Support clause 52.246-9P20.

(v) Indicate the applicable contract or order number.

(2) Inspection by USDA, AMS, Livestock, Meat, Grain and Seed Division: For all shipments, whether DD Form 250 (MIRR) is required or not, the Contractor shall obtain a USDA agricultural products acceptance certificate (Form LS 5-3), which shall contain the information specified in paragraph (c)(1). The Contractor shall also include the applicable lot number(s).

(3) Inspection by USDA, GIPSA, Field Management Division: When DD Form 250 (MIRR) is not required, the Contractor shall obtain an official USDA inspection or examination certificate, as

appropriate. In addition to the entries required by the GIPSA, the certificate shall contain the following certification: “Supplies listed hereon conform to all quality and condition requirements of the contract”.

(d) Distribution of Certificates.

Copying machine duplicates of USDC certificates and USDA certificates other than USDA Form LS 5-3 are not acceptable. Copying machine duplicates of USDA Form LS 5-3 are acceptable only as provided in paragraph (2) and (3) below. Copying machine duplicates of the original signed DD Form 250 are acceptable. In addition to the prohibited use of copying machine duplicates, USDC certificates must also be embossed with the official seal of the USDC. The contractor shall distribute certificates as follows:

(1) When DD Form 250 (MIRR) signed by the inspector is provided, a copy of the USDA/USDC inspection certificate need not be furnished to the designated paying office. (Exception: When the contract or specification provides for acceptance of product with a price adjustment to the contractor'' invoice, e.g., excess fat in ground beef, the original signed USDA/USDC inspection certificate must be attached to the top of the commercial invoice which is submitted to the designated paying office.)

(2) When DD Form 250 (MIRR) is not required, the original signed USDC inspection certificate or USDA inspection certificate other than USDA Form LS 5-3 must be attached to the top of the commercial invoice, which is submitted to the designated paying office. When the services of the USDA, AMS, Livestock, Meat, Grain and Seed Division are employed, the original signed USDA Form LS 5-3 or a copying machine duplicate of the original form LS 5-3 with an original signature must be attached to the top of the commercial invoice which is submitted to the designated paying office.

(3) As appropriate for any shipment, one blue or green signed copy of the original USDA Fruit and Vegetable Division certificate; one green or yellow carbon copy of the original signed USDA, AMS Dairy Division or Poultry Division certificate; one copy of the original signed USDA, GIPSA or USDC certificate; one copy of the original signed USDA Form LS 5-3 or a copying machine duplicate of the original USDA Form LS 5-3 with an original signature shall accompany each shipment to each destination and be marked ATTN: Subsistence Inspector.

(4) In the event the Contractor does not include appropriate certificate(s) with each shipment to each destination as required, the Government reserves the right to arrange for government grading/inspection and certification at destination at the Contractor’s expense.

(e) Lot Identification.

The Contractor shall code or distinctively mark by embossing, stamping, printing or stenciling each shipping container for every lot of supplies offered for acceptance so as to identify the lot from any other lot produced by the Contractor. Under both in-process (on line) and stationary lot inspections, the maximum lot size, unless otherwise specified in the contract, shall be defined by the assigned inspection agency.

(f) Particular Inspection Requirements.

(1) Primary Containers: Examination of primary containers for external condition and labeling shall be in accordance with the U.S. standards for condition of food containers, except that when requirements are contained in the specification, examination shall be performed in accordance with that specification. When additional requirements are specified in the specification, examination for these requirements shall be in accordance with the specification.

(2) Unit Loads: Examination of unit loads shall be in accordance with MIL-L-35078.

(3) All Other: Examination shall be in accordance with the specification.

52.246-9024 ALTERNATIVE INSPECTION REQUIREMENTS FOR SELECTED ITEMS (APR 2008) DLAD

Optional Contractor Testing of Contractor Furnished Materials.

(a) Option Statement.
To expedite shipment, the contractor has the option to perform or have performed by an independent laboratory, contractually required tests of end item or component material not specified by the U.S. Standards of Grade. The inspector for the government agency having jurisdiction upon ascertaining compliance may permit shipment, provided all other requirements of the contract are met. The designated government inspector will select random samples of each lot of end items or component material for verification testing until contractor's testing system is determined reliable. It is the intent of the government to rely on the contractor's test results and minimize government verification testing.

(b) Compliance of Product.
Acceptance of material as complying with required characteristics shall be based on the contractor's test results provided that government verification indicates contractor's test system is reliable as to each of the required characteristics. Where the contractor's test system is determined unreliable, product compliance will be based solely on government test results. In the event that the government detects irregularity in contractor's testing system, the designated government inspector may withhold approval until government test results indicate product conformance to contract requirements. For Meal, Ready-to-Eat (MRE) items, if government laboratory test results show that product is nonconforming, although previously approved by the government inspector, the product shall be withheld from final assembly and subject to return and replacement by the component contractor.

(c) Reliability Conditions.

(1) The contractor's testing system will be considered reliable as long as its test results are comparable to the government test results unless the government agency having jurisdiction has inspected the item produced at the contractor's plant within the previous 120 days, the inspector will select random samples of the first three lots of end items reliable, the government inspector will sample product for verification testing on a skip-lot basis. Unless otherwise required by DLA Troop Support or the inspection activity, skip-lot verification shall be done by random selecting not less than one lot in six consecutive lots presented for inspection of a specific item. The sampling procedure under skip-lot places the succeeding lots not chosen for inspection back into the universe available for subsequent inspection. For instance, starting with a group of six lots (i.e., 1-6), randomly select one of them for inspection. If lot 4 were selected, the next lot would be selected from lots 5, 6, 7, 8, 9, or 10. If lot 8 were chosen at random, the next selection would be from lots 9, 10, 11, 12, 13, or 14, and so on.

(2) Contractor's testing system will be considered unreliable when the government verification results indicate product nonconformance to contract requirements and a significant disparity exists between government laboratory results and contractor's testing results. When a contractor's test system is determined to be unreliable, compliance testing will revert to the government. Items must be government inspected prior to shipment.

(3) Contractor's testing system will be considered doubtful when a significant disparity exists between government laboratory results and contractor's test results and the former indicates significantly poorer quality than the latter; however, the government laboratory test results do not indicate product nonconformance to a statistically significant degree. When the contractor's testing system is considered doubtful, verification testing will be performed on each lot produced. However, the government will continue to permit the contractor to ship based on its own test results.

(4) Contractor testing system reliability will be determined by applying recognized statistical tests to the contractor's and government's test results.

(5) The contracting officer will notify the contractor of any change in reliability status. Notification will include details of the statistical determinations and test results used in reliability

studies. Telephonic notification and copies of these determinations will be provided to the government by DLA Troop Support - FTR.

(d) Procedures.

When the contractor elects to perform testing, the following shall apply:

(1) Reporting of Contractor's Results. Test reports for each lot of end item and components shall be submitted in the format contained in this clause by the contractor in an original and one copy to the designated government inspector. Government verification testing shall be withheld, at a minimum, until the contractor's completed inspection/test results are presented to the Government. The GQAR shall review the certification and test report submitted by the supplier to ensure accuracy and contr4actor's conformance with contractual requirements prior to initiating any Government verification testing.

(2) Verification Actions. The government shall perform verification testing for food items and component material required by the contract to assure that the contractor's testing results are reliable. Verification samples will be accompanied with a DD Form 1222, request for and results of tests. Copies of the results of testing performed by the government shall be given to the government inspector by the government laboratory that performed the tests. The results of nonconforming lots will be faxed to DLA Troop Support - FTR, (215-737-4115). The government reserves the right to increase the rate or amount of verification testing to and including full lot-by-lot testing, in the event the contractor does not furnish reliable test results or certificates, or to obtain additional data when significant disparities exist between the contractor's results and the results of the government laboratory. When any element of the contractor testing system is determined unreliable, the government may consider the testing system as a whole unreliable, and return to full lot-by-lot verification for each and every test. Testing by the government will continue until such time as the contractor's reliability is again established.

(3) Standby Test Samples. The government reserves the right to withdraw and hold standby test samples of component or finished product or both (quantity of which shall be the next larger available sample size required for unit testing and the same sample size required for composite testing) for inspection purposes. Unused samples will be returned to the contractor.

(e) Charges Applicable to Unreliable Test Status.

The prime contractor will be charged the costs of lot-by-lot inspection during the period that its test system status is considered unreliable. These charges will be processed by and approved by the contracting officer.

(f) Format for Contractor/Subcontractor Test Report.

Name & Address of Contractor:
Name & Address of Subcontractor: (if applicable)
Received for Testing: (date)
Contract Number:
Sample Tested: (end item or component, indicate by name)
Quantity Tested:
Applicable Specification:
Identification of Lot: (end item or component lot number, as applicable)
Quantity in Lot: (units)
Testing Completed: (date)
Test Report
(Report test results for each sample unit tested and the sample average, if required by the specification, and identify results obtained from composite samples.)
(Typed name and title of laboratory official and signature)

The following certification shall be affixed to the test report when testing was performed on component item by supplier's laboratory or by subcontractor's laboratory.

Certification

I certify that the above test results were furnished to this firm to cover the testing of samples which are Xrepresentative of the lot, and to the best of my knowledge and belief, have been found to comply with the analytical requirements of the specification, contract no. _____

Signature:_____

(typed name and title of contractor's representative who is authorized to sign the certificate, and the date)

The following certification shall be affixed to the test report when testing was performed on component and/or end item by contractor's laboratory or an independent laboratory.

Certification

I certify that the item presented for acceptance under terms of above referenced contract has been tested, as required by the contract, through the testing of samples that were representative of the lot, and to the best of my knowledge and belief, were found to comply with the analytical requirements of the specification and the contract.

Signature: _____

(typed name and title of contractor's representative who is authorized to sign the certificate, and the date)

Distribution:

(Original to government inspector. Copy with each shipment, when DD Form 250 (MIRR) reports are not provided.)

NOTE: Amend Distribution as follows: "Original and 1 copy to government inspector of which one copy will be forwarded by the GQAR promptly to DLA Troop Support - FTSB along the results of the Government verification test results. Copy with each shipment, when DD Form 250 (MIRR) reports are not provided.)"

52.246-9025 REINSPECTION OF NONCONFORMING SUPPLIES (APR 2008) DLAD

(a) When origin inspection is performed by the U.S. Department of Agriculture or U.S. Department of Commerce and supplies are found to be nonconforming at origin, the contractor may request USDA/USDC reinspection/formal review in accordance with the regulations of the respective agency. In such instances, the next larger available sample size will be used. The decision of the USDA/USDC representative as to conformance or nonconformance shall be final. It will be within the discretion of USDA/USDC whether to assess reinspection costs against the contractor.

(b) When origin inspection is performed by the USDA or USDC and supplies are found to be nonconforming at destination, the contractor may petition the contracting officer to obtain permission for a single reinspection, provided such petition provides valid technical reasons to believe the destination inspection findings were erroneous. The reinspection shall be performed in accordance with the original destination inspection criteria unless otherwise specified by the contracting officer.

(1) Reinspection of nonconforming supplies for grading factors, suspicion of fraud or substitution shall be conducted by the applicable origin inspection agency (USDA for meats and poultry, or USDC for waterfoods). All costs associated with USDA/USDC reinspection shall be borne by the contractor unless the reinspection results establish compliance with contractual requirements, in which case costs shall be borne by the government.

(2) Reinspection for all other criteria shall be accomplished by the Military Medical/Veterinary Services, as coordinated by the contracting officer with the applicable Military Medical/Veterinary Service Headquarters. The Military Medical/Veterinary Service Headquarters will designate the activity assigned to perform the reinspection and advise the contracting officer and the designated activity of the reinspection schedule. Reinspection shall be performed by personnel other than those involved in the original destination inspection. Reinspection costs shall be borne by the contractor when reinspection results substantiate the nonconformance. The government shall bear the costs of reinspection if the products are in compliance with contractual requirements.

(c) When inspection by the USDA or USDC is not a contract requirement and supplies are found nonconforming at destination, the contractor may petition the contracting officer one time only to obtain permission for a single reinspection provided such petition provides valid technical reasons to believe the original inspection findings were erroneous. If the contracting officer authorizes a reinspection, the reinspection results shall be final if they differ from the original inspection to such a statistically significant degree that error in the original results is probable. Otherwise, the original inspection results shall prevail. The reinspection/formal review shall be performed in accordance with the original inspection criteria, unless otherwise specified. All costs associated with the reinspection shall be borne by the contractor unless the reinspection results establish compliance with the contract requirements in which case costs shall be assumed by the government. Reinspection shall not be authorized when original inspection findings show that the supplies are unwholesome or contain a deleterious substance.

(d) The contractor may elect to petition the contracting officer to grant a waiver of those contract requirements for which supplies have been found nonconforming and accept the supplies “as is” with appropriate price consideration. However, if the contractor intends to exercise any option under (a), (b) or (c) above, the contractor must do so prior to requesting a waiver. The denial of a waiver by the contracting officer will result in final rejection of the nonconforming supplies without recourse to reinspection.

NOTE: If there is any discrepancy between this clause, 52.246-9025 Reinspection of Nonconforming Supplies (APR 2008) DLAD, and the Section E clauses entitled "General Inspection (Examination/Testing) Requirements", "Request for Rework, Request for Waiver, Request for Deviation, or Reinspection of Nonconforming Supplies", and "Rework of Nonconforming Product Pre or Post Acceptance", the requirements of "General Inspection (Examination/Testing) Requirements", "Request for Rework, Request for Waiver, Request for Deviation, or Reinspection of Nonconforming Supplies", and "Rework of Nonconforming Product Pre or Post Acceptance" shall take precedence. After any lot’s failure or rework, if the lot is reinspected, it will be both Contractor and Government inspected at the next higher sample size.

52.246-9013 CONTRACTOR AND GOVERNMENT SAMPLES AT ORIGIN (SEP 2007) DLAD

When required, the contractor will select samples of end items or components or both for contractor examination or testing as required by the item specification or other contract provisions. In addition, the government may select samples of end items or components or both at origin for the purpose of conducting required inspection. The government may use, consume, destroy or retain said samples at its option. Notwithstanding any other provision of the contract, the contractor shall bear the cost of contractor and government samples selected at origin, whether the supplies are accepted or rejected. Furthermore, unless otherwise specified, any sample unit which is altered as a result of the performance of any required examination or test so as to no longer meet the required characteristic of the component or end item, shall not be included as part of the supplies delivered under the contract. Examples of such

alteration include, but are not limited to, cutting an item to remove a slice or observe internal surface characteristics, procedures requiring re-canning/re-cooking of the product, thawing and refreezing.

52.246-15 CERTIFICATE OF CONFORMANCE (APR 1984) FAR

Certificate of Conformance (Apr 1984)

(a) When authorized in writing by the cognizant Contract Administration Office (CAO), the Contractor shall ship with a Certificate of Conformance any supplies for which the contract would otherwise require inspection at source. In no case shall the Government's right to inspect supplies under the inspection provisions of this contract be prejudiced. Shipments of such supplies will not be made under this contract until use of the Certificate of Conformance has been authorized in writing by the CAO, or inspection and acceptance have occurred.

(b) The Contractor's signed certificate shall be attached to or included on the top copy of the inspection or receiving report distributed to the payment office or attached to the CAO copy when contract administration (Block 10 of the DD Form 250) is performed by the Defense Contract Administration Services. In addition, a copy of the signed certificate shall also be attached to or entered on copies of the inspection or receiving report accompanying the shipment.

(c) The Government has the right to reject defective supplies or services within a reasonable time after delivery by written notification to the Contractor. The Contractor shall in such event promptly replace, correct, or repair the rejected supplies or services at the Contractor's expense.

(d) The certificate shall read as follows:

> I certify that on _____ *[insert date]*, the ____ *[insert Contractor's name]* furnished the supplies or services called for by Contract No._____ via ____ *[Carrier]* on _____ *[identify the bill of lading or shipping document]* in accordance with all applicable requirements. I further certify that the supplies or services are of the quality specified and conform in all respects with the contract requirements, including specifications, drawings, preservation, packaging, packing, marking requirements, and physical item identification (part number), and are in the quantity shown on this or on the attached acceptance document.
>
> Date of Execution: _____
> Signature: _____
> Title: _____

52.211-9046 FDA COMPLIANCE (APR 2008) DLAD

If any supplies acquired hereunder are recalled under the provisions of the Federal Food, Drug and Cosmetic Act, and regulations thereunder, the contractor shall, at the Government's option, either reimburse the Government or repair/replace the recalled supplies. Additionally, the contractor shall notify the contracting officer immediately when a firm decides to voluntarily recall or withdraw any product from the marketplace. Upon notification by the contracting officer that supplies acquired hereunder have been recalled, the contractor shall either (a) accept Certificates of Destruction from the Government after the supplies have been properly disposed of, (b) request return of the supplies, or (c) if supplies may be repaired on site without transporting them from their location, furnish all materials necessary to effect repairs. Replacement or reimbursement will be accomplished by the contractor immediately on receipt of Certificates of Destruction or returned supplies. The costs of replacement or

repair of supplies, and transportation and handling costs for movement of returned, replaced or repaired supplies within the continental United States shall be paid by the contractor. The provisions of this clause are applicable only when the value of the recalled supplies in the possession of the Government amounts to $100 or more. The rights and remedies of the Government provided in this clause are in addition to, and do not limit, any rights afforded to the Government by any other clause in the contract.

52.246-9044 SANITARY CONDITIONS (AUG 2008) DLAD

(a) Food Establishments.

(1) All establishments and distributors furnishing subsistence items under DLA Troop Support (formerly DSCP) contracts are subject to sanitation approval and surveillance as deemed appropriate by the Military Medical Service or by other Federal agencies recognized by the Military Medical Service. The government does not intend to make any award for, nor accept, any subsistence products manufactured, processed, or stored in a facility which fails to maintain acceptable levels of food safety and food defense, is operating under such unsanitary conditions as may lead to product contamination or adulteration constituting a health hazard, or which has not been listed in an appropriate government directory as a sanitarily approved establishment when required. Accordingly, the supplier agrees that, except as indicated in paragraphs (2) and (3) below, products furnished as a result of this contract will originate only in establishments listed in the U.S. Army Veterinary Command (VETCOM) Circular 40-1, Worldwide Directory of Sanitarily Approved Food Establishments for Armed Forces Procurement, (Worldwide Directory) (available at: https://vets.amedd.army.mil/vetcom) Compliance with the current edition of DoD Military Standard 3006, Sanitation Requirements for Food Establishments, is mandatory for listing of establishments in the Worldwide Directory. Suppliers also agree to inform the contracting officer immediately upon notification that a facility is no longer sanitarily approved and/or removed from the Worldwide Directory and/or other Federal agency's listing, as indicated in paragraph (2) below. Suppliers also agree to inform the contracting officer when sanitary approval is regained and listing is reinstated.

(2) Establishments furnishing the products listed below and appearing in the publications indicated need not be listed in the Worldwide Directory. Additional guidance on specific listing requirements for products/plants included in or exempt from listing is provided in Appendix A of the Worldwide Directory.

(i) Meat and meat products and poultry and poultry products may be supplied from establishments which are currently listed in the "Meat and Poultry Inspection Directory", published electronically by the U. S. Department of Agriculture, Food Safety and Inspection Service (USDA, FSIS) (available at: http://www.fsis.usda.gov/Regulations/Meat_Poultry_Egg_Inspection_Directory/index.asp). The item, to be acceptable, shall, on delivery, bear on the product, its wrappers or shipping container, as applicable, the USDA shield and applicable establishment number. USDA listed establishments processing products not subject to the Federal Meat and Poultry Products Inspection Acts must be listed in the Worldwide Directory for those items.

(ii) Intrastate commerce of Meat and meat products and poultry and poultry products for direct delivery to military installations within the same state (intrastate) may be supplied when the items are processed in establishments under state inspection programs certified by the USDA as being "at least equal to" the Federal Meat and Poultry Products Inspection Acts. The item, to be acceptable, shall, on

delivery, bear on the product, its wrappers or shipping container, as applicable, the official inspection legend or label of the inspection agency and applicable establishment number.

(iii) Shell eggs may be supplied from establishments listed in the "List of Plants Operating under USDA Poultry and Egg Grading Programs" published electronically by the USDA, Agriculture Marketing Service (AMS) (available at: http://www.ams.usda.gov/POULTRY/Grading.htm).

(iv) Egg products (liquid, dehydrated, frozen) may be supplied from establishments listed in the "Meat, Poultry and Egg Product Inspection Directory" published electronically by the USDA FSIS (available at: http://www.fsis.usda.gov/Regulations_&_Policies/Meat_Poultry_Egg_Inspection_Directory/index.asp). All products, to be acceptable, shall, on delivery, bear on the product, its wrappers or shipping container, as applicable, the official inspection legend or label of the inspection agency and applicable establishment number.

(v) Fish, fishery products, seafood, and seafood products may be supplied from establishments listed under "U.S. Establishments Approved For Sanitation And For Producing USDC Inspected Fishery Products" in the "USDC Participants List for Firms, Facilities, and Products", published electronically by the U.S. Department of Commerce, National Oceanic and Atmospheric Administration Fisheries (USDC, NOAA) (available at: seafood.nmfs.noaa.gov). All products, to be acceptable, shall, on delivery, bear on the product, its wrappers or shipping container, as applicable, the full name and address of the producing facility.

(vi) Pasteurized Milk and milk products may be supplied from plants having a pasteurization plant compliance rating of 90 percent or higher, as certified by a state milk sanitation officer and listed in "Sanitation Compliance and Enforcement Ratings of Interstate Milk Shippers" (IMS), published electronically by the U.S. Department of Health and Human Services, Food and Drug Administration (USDHHS, FDA) (available at: http://www.cfsan.fda.gov/~ear/ims-toc.html). These plants may serve as sources of pasteurized milk and milk products as defined in Section I of the "Grade 'A' Pasteurized Milk Ordinance" (PMO) published electronically by the USDHHS, FDA (available at: http://www.cfsan.fda.gov/~ear/pmo03toc.html).

(vii) Manufactured or processed dairy products only from plants listed in Section I of the "Dairy Plants Surveyed and Approved for USDA Grading Service", published electronically by Dairy Grading Branch, AMS, USDA (available at: http://www.ams.usda.gov/dairy/dypubs.htm) may serve as sources of manufactured or processed dairy products as listed by the specific USDA product/operation code. Plants producing products not specifically listed by USDA product/operation code must be Worldwide Directory listed (i.e. plant is coded to produce cubed cheddar but not shredded cheddar; or, plant is coded for cubed cheddar but not cubed mozzarella). Plants listed in Section II and denoted as "P" codes (packaging and processing) must be Worldwide Directory listed.

(viii) Oysters, clams and mussels from plants listed in the "Interstate Certified Shellfish Shippers Lists" (ICSSL), published electronically by the USDHHS, FDA (available at: http://www.cfsan.fda.gov/~ear/shellfis.html).

(3). Establishments exempt from Worldwide Directory listing. Refer to AR 40-657/NAVSUPINST 4355.4F/MCO P1010.31G, Veterinary/Medical Food Inspection and Laboratory Service, for a list of establishment types that may be exempt from Worldwide Directory listing. (AR 40-657 is available from National Technical Information Service, 5285 Port Royal Road, Springfield, VA 22161; 1-800-553-6847; or download from web site: http://www.usapa.army.mil/ .) For the most current listing of exempt plants/products see the Worldwide Directory (available at: https://vets.amedd.army.mil/vetcom).

(4) Subsistence items other than those exempt from listing in the Worldwide Directory, bearing labels reading "Distributed By", "Manufactured For", etc., are not acceptable unless the source of manufacturing/processing is indicated on the label or on accompanying shipment documentation.

(5) When the Military Medical Service or other Federal agency acceptable to the Military Medical Service determines the levels of food safety and food defense of the establishment or its products have or may lead to product contamination or adulteration, the contracting officer will suspend the work until such conditions are remedied to the satisfaction of the appropriate inspection agency. Suspension of the work shall not extend the life of the contract, nor shall it be considered sufficient cause for the contractor to request an extension of any delivery date. In the event the contractor fails to correct such objectionable conditions within the time specified by the contracting officer, the government shall have the right to terminate the contract in accordance with the "Default" clause of the contract.

(b) Delivery Conveyances.

The supplies delivered under this contract shall be transported in delivery conveyances maintained to prevent tampering with and /or adulteration or contamination of the supplies, and if applicable, equipped to maintain a prescribed temperature. The delivery conveyances shall be subject to inspection by the government at all reasonable times and places. When the sanitary conditions of the delivery conveyance have led, or may lead to product contamination, adulteration, constitute a health hazard, or the delivery conveyance is not equipped to maintain prescribed temperatures, or the transport results in product 'unfit for intended purpose', supplies tendered for acceptance may be rejected without further inspection.

52.246-9045 FEDERAL FOOD, DRUG AND COSMETIC ACT-WHOLESOME MEAT ACT (AUG 2008) DLAD

(a) The contractor warrants that the supplies delivered under this contract comply with the Federal Food, Drug and Cosmetic Act and the Wholesome Meat Act, and regulations thereunder. This warranty will apply regardless of whether or not the supplies have been:

(1) Shipped in interstate commerce,

(2) Seized under either act or inspected by the Food and Drug Administration or Department of Agriculture.

(3) Inspected, accepted, paid for or consumed, or any or all of these, provided however, that the supplies are not required to comply with requirements of said acts and regulations thereunder when a specific paragraph of the applicable specification directs otherwise and the supplies are being contracted for military rations, not for resale.

(b) The government shall have six months from the date of delivery of the supplies to the government within which to discover a breach of this warranty. Notwithstanding the time at which such breach is discovered, the right is reserved to give notice of breach of this warranty at any time within such applicable period or within 30 days after expiration of such period, and any such notice shall preserve the rights and remedies provided herein.

(c) Within a reasonable time after notice to the contractor of breach of this warranty, the government may, at its election:

(1) Retain all or part of the supplies and recover from the contractor, or deduct from the contract price, a sum determined to be equitable under the circumstances;

(2) Return or offer to return all or part of the supplies to the contractor in place and recover the contract price and transportation, handling, inspection and storage costs expended therefore; provided, that if the supplies are seized under either act, such seizure, at government option, shall be deemed a return of supplies within the meaning of this clause and thereby allow the government to pursue the remedy provided herein. Failure to agree to any deduction or recovery provided herein shall be a dispute of a question of fact within the meaning of the clause of this contract entitled "disputes".

(d) The rights and remedies provided by this clause shall not be exclusive and are in addition to other rights and remedies provided by law or under this contract, nor shall pursuit of a remedy herein or by law either jointly, severally or alternatively, whether simultaneously or at different times, constitute an election of remedies.

52.246-9003 MEASURING AND TEST EQUIPMENT (Jun 1998) – DLAD

Notwithstanding any other clause to the contrary, and/or in addition thereto, the contractor shall ensure that the gauges and other measuring and testing equipment, used in determining whether the supplies presented to the Government for acceptance under this contract fully conform to specified technical requirements, are calibrated in accordance with ISO 10012-1 or ANSI/NCLS Z540-1.

52.246-9004 PRODUCT VERIFICATION TESTING (Jul 2008) - DLAD

(a) References: The applicable documents are the issues of Federal Acquisition Regulation (FAR) clause 52.246-02, "Inspection of Supplies-Fixed Price," and ANSI/ASQC Z1.4, Sampling Plan and Tables for Inspection by Attributes, which are in effect on the date of solicitation for awards resulting from Invitation for Bids and the date of award for all other contractual actions. These documents form the basis for the Government's right to perform product verification testing (PVT) of this product. FAR 52.246-02 is hereby incorporated by reference into the contract if not otherwise called out in the purchase document.

(b) The contractor is responsible for ensuring that supplies are manufactured, produced, and subjected to all tests required by applicable material specifications/drawings specified in the purchase description of this contract. Notwithstanding any other clause to the contrary, and/or in addition thereto, the Government reserves the right to conduct PVT to ascertain if any or all requirements of the purchase identification description contained elsewhere herein are met prior to final acceptance.

(c) On any given contract, the Government may require PVT through a Government designated testing laboratory on the contract or production lot at Government expense. Testing will consist of chemical and/or mechanical/dimensional conformance tests as the Government deems necessary. When material under the contract is designated by the Contracting Officer/Administrative Officer for each test, the Government inspector will select a random sample from the contract or production lot, and send the samples to a designated laboratory for testing. Where origin inspection is specified, the Contractor agrees to make available, at the Government's request, at the manufacturing facility, subcontracting facility, and/or final point of inspection, the quantity selected by the Contract Administrative Office Quality Assurance Representative to verify that the entire lot tendered meets the requirements of the contract. the Government shall be permitted to select such samples at random from the production lot tendered for acceptance.

(d) [This subparagraph pertains only to contracts and bilateral purchase orders.]

(1) The PVT samples will be sent, by the Government at Government expense, to a Government-designated testing laboratory for product verification. The Government will notify the contractor of the results of the testing within 15 working days of receipt of the samples by the Government. If the Government fails to act within the period set forth herein for notification, the contracting officer shall,

upon timely written request, equitably adjust, under the Changes clause of this contract, the delivery or performance dates and/or the contract price and any other contractual terms affected by the delay. The Government is not required to accept/reject the supplies tendered until after the receipt of the PVT test results.

(2) The Government shall have the option to require the Contractor to screen the entire lot tendered for any defects noted by the PVT testing. Any defects found shall be corrected before retendering the lot for acceptance by the Government. Further, the Government may subject this lot to additional PVT testing. If the Government disapproves the lot tendered for acceptance because of a failure to pass the PVT, the contractor shall be deemed to have failed to make delivery within the meaning of the Default clause of this contract. In such case, the Government reserves all rights to remedies to which it is otherwise entitled by law, regulation, or this contract.

(e) [This subparagraph pertains only to unilateral purchase orders.]

(1) The PVT samples will be sent by the Government and at Government expense, to a Government-designated testing laboratory for product verification. The Government will notify the contractor of the results of the testing within 15 days after receipt of the samples. If the Government fails to act within the specified time period set forth herein for notification, the contracting officer shall, upon timely written request from the contractor, incorporate FAR clause 52.243-1, "Changes-Fixed Price," into the purchase order, and equitably adjust the delivery or performance date and/or the price and any other terms affected by the delay. The Government is not required to accept/reject the supplies tendered until after the PVT test results.

(2) The Government shall have the option to require the Contractor to screen the entire lot tendered for any defects noted by the PVT. Any defects so found shall be corrected before retendering the lot for acceptance by the Government. Further, the Government may subject this lot to additional PVT. If the Government disapproves the lot tendered for acceptance because of a failure to pass the PVT, the Government has the right to reject the entire offer, thereby releasing the parties from further obligations under the purchase order.

NOTICE: The following Federal Acquisition Regulation clause is incorporated by reference:
52.246-2 INSPECTION OF SUPPLIES - FIXED PRICE (AUG 1996)

52.246-11 HIGHER-LEVEL CONTRACT QUALITY REQUIREMENT (FEB 1999)

The Contractor shall comply with the higher-level quality standard selected below. [If more than one standard is listed, the offeror shall indicate its selection by checking the appropriate block.]

……Title	Number	Date	Tailoring
☐....Quality Management Requirements Standard	ANSI/ISO/ASQ Q9001	2008	Note 1/
☐....._____	_____	____	_____

Note 1/ At the election of the contractor, the contractor may select an industry standard equivalent to ANSI/ISO/ASQ Q9001; cite the Title, Number, and Date and Tailoring (if any) and check the appropriate box.

E-6. INSPECTION AND ACCEPTANCE AT ORIGIN (RATION ASSEMBLER)

For Meal-Ready-to-Eat Final Assemblies the following clause is set forth in full text:

NOTE: Offeror is required make one or more entries in the following clause.

52.246-9008 INSPECTION AND ACCEPTANCE AT ORIGIN (AUG 2007) - DLAD

(a) Inspection and Acceptance are at Origin.
(b) The point of acceptance will be the point of last inspection before shipment unless otherwise indicated by the offeror.
(c) The Offeror shall indicate below the location where supplies will be inspected:
Supplies:
Plant: _____Cage Code:_____
Street: _____
City/St/Zip: _____
Applicable to clin(s): _____
(d) The Offeror shall indicate below the location where packaging will be inspected:
Packaging:
( ) Same as for supplies
or,
Plant: _____ Cage Code: _____
Street: _____
City/St/Zip: _____
Applicable to clin(s): _____
(e) For CLIN(S) described by manufacturer's name/code and part number:
(1) Contractor must present evidence of performance of all quality assurance requirements specified in the contract and ensure that item will serve its intended purpose by performing examinations and tests to determine (A) completeness of item, (B) absence of rust, contamination, or deterioration, (C) correct identification, (D) absence of any damage, and (E) compliance with preparation for delivery. If the contractor is not the manufacturer of the supplies, evidence must be furnished to establish that the supplies were produced by the manufacturer.
(2) The word "manufacturer" means the actual manufacturer of each CLIN. The Government's Quality Assurance Representative may require that evidence be furnished establishing the name and address of the plant that manufactures each CLIN to ensure that a domestic product is being supplied.
(f) For CLIN(S) designated as Former Government Surplus (whether described by manufacturer's name/code and part number, or by Military or Federal specification or drawing), the original package markings of each item shall be verified to previous Government contract number and part number (as specified in DLAD 52.211-9000, Section I of the award). Any deviation from this number shall be cause for rejection of the item.
(g) Additional inspection requirements may be required, based on the evaluation of the surplus offer, by the procuring activity. Such additional requirements, if necessary, will be identified before the award.

TECHNICAL DATA FOR HUMANITARIAN DAILY RATION
MRE XXXII – MRE XXXVI

PURPOSE:
The purpose of these requirements is to enable the government to procure a complete daily ration in one package sufficient to meet the Salient Characteristics and other provisions of this document. The ingredients, formulations, and components offered must not contain prohibited material as defined in this document. However, they must provide the established nutritional requirements as specified in the Salient Characteristics.

The government shall have sole authority to determine acceptability of products offered. A Humanitarian Daily Ration composed of the following entrees and complementary components may be used by Offerors as a general guide to show the types of components that have been found to be acceptable in the past. This is in no way intended to limit selections of entrees or complementary components nor is it intended to excuse any of the requirements found in the Salient Characteristics of this document.

MENU EXAMPLE

Lentil stew
Beans and rice
Fig bar
Fruit pastry
Shortbread cookie
Crackers
Peanut butter
Fruit flavored spread
Salt
Pepper
Spoon

Each meal bag shall additionally contain:
One packet red cayenne pepper
One packet refined sugar
One book plain paper safety matches
One plain paper napkin

Accessory and condiment items for the Humanitarian Daily Ration (HDR) shall comply with applicable shelf life and size requirements specified for the HDR and MRE.
NOTE: The government reserves the right to determine acceptability of pictorial utilization instructions and/or other graphics as required elsewhere in this document. In the event of multiple awards, and at the option of the government, in the instant procurement and in any future procurements, pictorial utilization instructions and/or other graphics submitted in accordance with these requirements may be used by the government, without attribution,

restriction, or compensation to promote standardization of the Humanitarian Daily Ration. NOTE: ENTREE POUCHES, CARTONS AND MEAL BAGS ARE REQUIRED TO BE IN ACCORDANCE WITH THlE REFERENCE SPECIFICATIONS. HOWEVER, SIZE AND NET WEIGHT OF POUCHES/CARTONS/MEAL BAGS IS AT THE DISCRETION OF THE OFFEROR PROVIDED THE SAME PROTECTION AFFORDED BY THE PACKAGING TO THE MRE RATION IS MAINTAINED FOR THE HUMANITARIAN DAILY RATION. COLORS SHALL BE AS DESCRIBED IN THE PACKAGING PARAGRAGHS IN SECTION D OF THIS DOCUMENT.

SECTION C

C-1 NSN/DESCRIPTION

8970-01-375-0516
RATION, HUMANITARIAN, READY-TO-EAT, each meal bag is for one person for one day, no beef, pork, poultry, fish or any other animal or animal by-product including animal-based cooking fats or oils, except as permitted by this document. See Section C-2 b (3) for definition of prohibited products.

C-2 SALIENT CHARACTERISTICS

The HUMANITARIAN DAILY RATION shall be comprised of the following salient characteristics:

a. All food components shall be ready to eat (no preparation necessary) and shall be palatable.

b. The meal bag shall contain at least two unprohibited entrees and unprohibited complementary items sufficient to provide a nutritionally balanced feeding adequate to sustain a moderately malnourished individual for one day and containing the minimum nutritional requirements set forth in b.(1) and b.(2). Entrees and complementary items may include dairy products, however, dairy amounts shall not exceed levels considered acceptable for lactose-intolerant individuals. Bread and grain products, as well as fortified cereals and biscuits, milk-based puddings, fruit rolls and fruit sauces, which can be easily digested by infants and children, are considered important components. Prohibited products as described in paragraph b.(3) shall not be included. Further examples of unprohibited products are listed in paragraph b.(4)

(1) Total calories per meal bag shall be not less than 2200.

(2) Nutrient and micro nutrient levels shall meet the requirements in the tables below:

NUTRIENT GRAMS CALORIES AS PERCENT
Fat 67-73 600-660 27-30 Protein 55-70 220-286 10-13 Carbohydrate NLT 345 NLT 1380 NLT 60

MICRO NUTRIENT AMOUNT

Vitamin A 900.0 mc stabilized retinol equivalent Vitamin C 60.0 mg Vitamin D 10.0 mcg
Iron 12.0 mg Calcium 1300.0 mg Phosphorous 1300.0 mg Folate 400.0 mcg
B-1 1.5 mg
B-12 2.0 mcgmcg
B-6 2.0 mg
B-2 1.7 mg
Niacin 18.0 mg
Zinc 15.0 mg
Magnesium 350.0 mg
Calcium/Phosphorous ratio shall be 1 to 1.

(3) Prohibited products' is defined as the total exclusion of beef; pork, poultry, fish, or any other animal product or animal by-product from all ration components or from use in the preparation or processing of all ration components, including animal-based cooking fats or oils, except that dairy products are permitted in amounts digestible by lactose-intolerant individuals. In addition, products containing ethyl alcohol or ingredients derived from or containing ethyl alcohol are prohibited.

(4) Examples of unprohibited entrees include, but are not limited to, cereal, grain, legume, vegetable, or a combination of vegetable, grain, fruit, and nut-based products. Other acceptable products include, but are not limited to, vegetable stews, potato/other nutritious tubers, soy products, pastas, lentils/other beans, wheat/rice/corn/other cereal products, pasta, fruit rolls, fruit/grain bars, wet pack/dried fruits, fortified biscuits, nuts/nut pastes, iodized salt and/or other spices.

c. Each meal bag shall include a 7-inch plastic spoon and a non-alcohol-based, premoistened towelette, containing an anti-microbial agent in a leak-proof package. The cleansing solution in the towelette shall comply with the Consumer Products Safety Act and shall not be hazardous or toxic under normal conditions of use.

d. The minimum shelf life shall be **THIRTY-SIX MONTHS** at 80 degrees F from the time components are placed into the meal bag.

e. Offerors shall provide a minimum of two entree varieties per shipping container. No entrees shall be duplicated within a menu. Description of entrees shall be limited to generic nomenclature of the product.

f. Each shipping container shall contain ten meal bags.
g. Packaging, labeling, packing, marking. and unitization shall be as specified in Section D of this document.

C-3 MISCELLANEOUS REQUIREMENTS:

a. A nutritional profile of each menu and complete ingredient descriptions of each component shall be provided by the Offeror with the Offer.* All menu configurations and nutritional data shall be approved by the Natick Soldier Research Development and Engineering Center, prior to any awards that may result from solicitation. Such submission shall not relieve successful Offerors from complying with any of the provisions of these requirements.

*A nutritional analysis for each product shall be provided to the Natick Soldier Research Development and Engineering Center with the award of the contract and each time there is a major formulation change. The nutritional analysis shall be generated by the Genesis Product Development and Labeling Software by ESHA, version 6.2 or higher and be sent electronically to the Natick Soldier Research Development and Engineering Center (attn: Kristina.Howard1@us.army.mil). For each item, the Genesis food list files shall be provided for 100-gram portion sizes along with the food item files (for unique items entered into the contractor's database). The ingredients and the weight of each ingredient shall be included for each formulation. The nutrients as required under Section C Salient Characteristics above are still required.

The nutrients included shall be as follows:
Weight (grams); Vitamin A (IU); thiamin Bl (mg); riboflavin-vitamin B2 (mg); niacin - vitamin 133 (mg); vitamin E6 (mg); vitamin Bl2 (mcg); calcium (mg); iron (mg); folate (mcg); vitamin C (mg); phosphorus (mg); zinc (mg).

b. Compliance with the provisions contained in Title 21, Code of Federal Regulations Part 110 "Current Good Manufacturing Practice in Manufacturing, Packaging or Holding Human Food," and all regulations referenced herein, is required. In addition, the contractor is required to comply with all with the provisions contained within specific parts of the Code of Federal Regulations. For example, low-acid canned food manufacturers, Part 110 and 113 are applicable.

c. The procedures contained in the "Integrated Pest Management (IPM) Program Requirements of Operational Rations," are required and apply to all operational rations food component operations. Each contractor is to have an IPM program in place prior to the initiation of production of Government product. The IPM plan and the associated pesticide labels and MSDS documents are not to be submitted to DLA Troop Support. The contractor shall have those documents available for on-site review during a Quality Systems Management Visit (QSMV) or Quality Systems Compliance Audit. In addition, evidence of an insect or rodent infestation, foreign material or contamination involving any end item will be cause for rejection of the involved lot. IPM program requirements can be found on the DLA Troop Support website at: http://www.dscp.dla.mil/subs/support/quality/ipm-cpaf.pdf.

d. As required by 48 CFR 246.471-1 Subsistence, AR 40-657, Veterinary/Medical Food Inspection and Laboratory Service, DLAR 4155.3, inspections of Subsistence Supplies and Services, DLAD 52.246-9044, Sanitary Conditions, and as clarified by the Armed Forces Food Risk Evaluation Committee, all Operational Ration Food Components will originate from sanitarily approved establishments. Acceptable sanitary approval is constituted by listing in the "Directory of Sanitarily Approved Food Establishments for Armed Forces Procurement," published by the U.S. Army Veterinary Command (VETCOM), or an establishment inspected and approved by the U.S. Department of Agriculture (USDA) or the U.S. Department of Commerce (USDA) and possessing a USDA/USDC establishment number. This requirement applies to all GFM and CFM Operational Ration Food Components and to all Operational Ration types. Requests for inspection and "Directory" listing by VETCOM will be routed through DLA Troop Support-FTR for coordination and action. Situations involving sole sources of supply, proprietary supply sources, and commercial Brand Name items will be evaluated directly by the Chief, DLA Troop Support-FTR, in coordination with the Chief, Approved Sources Division, VETCOM.

e. Currently, all DLA Troop Support Subsistence contracts have a requirement for the submission and implementation of some type of Product Protection Plan at each contractor facility. Areas of concern listed in this checklist must be addressed in the plan. As a result of increased risk for the potential of intentional food tampering the plan shall describe (in general terms) the type of preventive measures that are taken or will be taken to reduce product protection vulnerabilities and to protect the food intended for DLA Troop Support's customers at CONUS and OCONUS locations. The plan must include preventive steps taken to safeguard product from intentional tampering/ contamination during all stages of receipt, production, storage, assembly, delivery, and shipment. If a Product Protection Plan (including Product Protection Plans covered in QSP) was previously submitted to DLA Troop Support, identify the office, name of the person the plan was submitted to, date of submittal, and rating assigned. The following information may be covered in the Product Protection Plan or under other pertinent areas of the QSP, if a QSP is required for the facility. If some of the product protection information is covered in the QSP (e.g., receipt inspection, storage, warehousing, training,

traceability, mock recalls, etc.) cross-reference the applicable Section/Area of the QSP. If the plan is submitted with the QSP, a rating (separate from the QSP) of acceptable or unacceptable will be assigned to the Product Protection Plan. To download a copy of the Troop Support Food Defense Checklist go to http://www.dscp.dla.mil/subs/support/quality/index.asp or contact the applicable DLA Troop Support Contracting Officer or the Quality Audits & Food Defense Branch (DLA Troop Support -FTSB).

f. All products shall comply with all applicable Federal and State mandatory requirements and regulations relating to the preparation, processing, thermoprocessing, packaging, labeling, packing, storage, and distribution of those products and with all applicable provisions of the Federal Food, Drug, and Cosmetic Act and regulations promulgated thereunder.

SECTION D PACKAGING/LABELING/PACKING/MARKING/UNITIZATION

D-1 PACKAGING:

a. Thermostabilized entrees shall be filled and sealed into heat-sealable flexible pouches in accordance with the processing and packaging requirements of MIL-PRF-44073, except for size, and shall be placed into cartons meeting the design and material requirements of MIL-PRF-44073, except for size and count.

b. All other food components shall be filled and sealed into separate preformed or form-fill-seal trilaminate packaging material containing gas and moisture barrier properties sufficient to provide the required shelf life. OXYGEN SCAVENGERS SHALL NOT BE USED. The color shall be 17178 of FED-STD-595.

c. Entrees, other components, and spoons shall be packed into meal bags fabricated in accordance with the requirements of ACR-M-032, as amended for MRE XXXII, except for size, color, arid labeling. The color shall be 32356 of FED-STD-595. Labeling shall he as stipulated herein.

D-2 LABELING:

NOTE: ALL LABELING SHALL BE IN ACCORDANCE WITH FDA AND USDA REQUIREMENTS INCLUDING NUTRITIONAL FACTS LABELING IN ACCORDANCE WITH THE NUTRITIONAL LABELING AND EDUCATION ACT (NLEA). MAXIMUM SIZE OF PRINT FOR SUCH REQUIRED USDA/FDA LABELING SHALL BE THE MINIMUM SIZE PERMITTED BY THOSE REQUIREMENTS AND WITH THE REQUIREMENTS STATED BELOW.

a. Thermostabilized entree pouches shall be labeled in accordance with the requirements for MIL-PRF-44073, including the Nutrition Facts' label in accordance with the Nutrition Labeling and Education Act (NLEA) and all other applicable FDA/USDA regulations. In addition, the carton shall be printed with "HUMANITARIAN DAILY RATION", "FOOD GIFT FROM THE PEOPLE OF THE UNITED STATES OF AMERICA" and pictorial utilization instructions.

b. Other component packaging material shall be labeled with the Nutrition Facts label in accordance with the Nutrition Labeling and Education Act (NLEA) and all other applicable FDA/USDA regulations. In addition, a handclasp emblem shall be printed on each package in accordance with figure one, attached. The clasped hands outline and the words "UNITED STATES OF AMERICA" shall he black. The emblem may be on one side of the material and the dimensions shall be not less than 7/8 inch wide and 1-1/4 inch high. The handclasp emblem is not required on condiments or spreads. Pictorial utilization instructions shall be included on

each package. Alternatively, for components other than the entrees, an insert may he placed inside each meal bag showing pictorial utilization instructions for each component.

c. Meal bags shall be labeled: “HUMANITARIAN DAILY RATION”, “FOOD GIFT FROM THE PEOPLE OF THE UNITED STATES OF AMERICA”, and with the number of the menu packed inside. In addition, the meal bag shall be marked with a pictorial representation indicating that the bag should be opened and the contents eaten. The letters “USA” and a pictorial representation of the Flag of the United States of America shall also be prominently displayed. A graphic (for example, an arrow) that indicates the peel initiator point is required. The following information shall also he printed prominently on each meal bag in English, French, and Spanish:
“THIS BAG CONTAINS ONE DAY’S COMPLETE FOOD REQUIREMENT FOR ONE PERSON.”

D-3 PACKING:

a. It shall be the responsibility of the assembly contractor to ensure that HDR entree items shipped to a unit packager and /or assembly point are packed so as to assure product compliance with applicable end item requirements.

b. Complementary components shall be packed in accordance with ASTM D 395 1 —“Standard Practice for Commercial Packaging”.

c. Ten meal bags shall be snugly packed into V2s fiberboard boxes with liner in accordance with the requirements of ACR-M-032, except for count, configuration of the meal bags within the shipping container, and references to Case A and Case B. Time-Temperature Indicator (TTI) labels shall be applied to the shipping containers in accordance with all the requirements and quality assurance provisions of ACR-M-032. Configuration of the meal bags within the shipping container shall be at the discretion of the contractor as determined by dimensions of filled meal bags but such packing shall be without crushing or otherwise causing damage to the meal bags or product.

ALTERNATIVE PACKING OF ENTREES AND COMPLEMENTARY COMPONENTS FOR SHIPMENT TO RATION ASSEMBLER
When the product processing plant and the ration assembler are located in close proximity to each other, an alternative method of conveyance that utilizes reusable containers or totes and is mutually suited to both plant operations, may be submitted to the Contracting Officer for determination of adequacy and approval for use. Proposals shall include a proposed system of labeling/marking for maintenance of lot identity from processor to assembler.

D-4 MARKING:

a. Marking of HDR entrée item shipping containers shipped to a unit packager and/or to the assembly point shall be in accordance with applicable Federal and/or State requirements provided a production lot number that indicates the production date of the contents is included. The lot number on the shipping container shall be in the clear or a Julian date code.

b. Shipping containers for complementary products shall be marked in accordance with Paragraph 5.1.6 of ASTM D 3951 — "Standard Practice for Commercial Packaging"

c. Shipping containers for assembled meal bags shall be marked in accordance with DLA Troop Support FORM 3556 and the following: 1/2/

NSN: 8970-01-375-0516
HUMANITARIAN DAILY RATIONS
NO. OF MEALS 10
WEIGHT CUBE_____
CONTRACT NO. LOT NO.___
NAME AND ADDRESS OF ASSEMBLER
DATE PACKED:_____
INSPECTION/TEST DATE

In addition to the above markings, a pictorial representation of the flag of the United States of America shall be printed on one end of the sleeve with the words "food gift from the people of the United States of America.". One side of the shipping container shall be marked with "humanitarian daily ration" in capital letters not less than 1-1/2 inches high and with a handclasp emblem in accordance with figure I. Attached. The dimensions shall be not less than 2-1/2 inches wide and 3-1/4 inches high and a one color process (black) may be used.

1/ Shelf life is THIRTY-SIX months and shall be used to compute the inspection/test date.

2/ Contractor is responsible for applying weight and cube.

d. Unit loads of assembled rations shall be marked in accordance with DLA Troop Support FORM 3556, except the identification, contract data, and special markings shall not apply and, in lieu thereof, unit loads shall be marked on 2 adjoining sides as follows:

(1) Gross Weight and Cube (including pallet base)
(2) Number of shipping containers per load

D-5 UNITIZATION:

a. It shall be the responsibility of the Assembly Contractor to ensure that HDR entree items shipped to a unit packager and/or to the assembly point are unitized or otherwise shipped so as to assure product compliance with applicable end item requirements and to be in compliance with Federal and or/State regulatory requirements.

b. Wooden Pallets -- All pallets constructed of non-manufactured wood must be Heat Treated and Certified as such IAW requirements cited in DLA Troop Support Form 3507. "International Palletization/Dunnage Requirements".

c. Complementary components shall be unitized in accordance with Paragraph 5.1.5 of ASTM D 3951 — "Standard Practice for Commercial Packaging".

d. Assembled meal bag shipping containers shall be palletized and prepared in unit loads in accordance with type I. class B, (figure 2) requirements of DLA Troop Support Form 3507, except metallic strapping and/or edge protectors are prohibited.

e. Time-Temperature Indicator (TTI) labels shall be applied to the unit loads in accordance with all the requirements of and quality assurance provisions of ACR-M-032.

SECTION E - INSPECTION AND ACCEPTANCE

The provisions contained Section E – MRE Inspection and Acceptance apply to the Humanitarian Daily Ration, except as amended by specification requirements for Humanitarian Daily Ration, Section E – Inspection and Acceptance, below:

E-1 For Entrees and Components (including Packaging and Packing Materials):
Contractor is responsible for receipt inspection at assembly plant for all items to include, as a minimum, compliance with the applicable requirements.

E-2 For the Assembled Ration:

a. Inspection and acceptance shall be at origin (assembler),

b. The contractor will provide calorie, nutrient, and micronutrient counts upon request.

c. The Government reserves the right to perform laboratory testing to verify that all nutritional requirements are in compliance with contractual requirements.

d. In the event the Government determines the product to be unsatisfactory, it shall have the rights provided in the Supply Warranty Clause, cited elsewhere in the contract. A valid quality complaint affecting the serviceability of the product, resulting from this procurement, may be used as determination factor in future performance ratings.

e. The Higher Level Contract Quality Requirements (Quality Systems Plan), MPC Clause 52.246-9001, and the Quality Assurance Provision - Statistical Process Control (SPC) clauses are applicable for HDR assembly and thermostabiized component manufacturing. Offerors with existing QSP/MPC/SPC plans may reference these plans if they cover the proposed work on a resultant contract. However, prior to production the contractor shall establish and advise the DLA Troop Support-FTSB of any changes, especially process control points used in their contractor inspection system for HDR production that differs from current MRE plans. Production can commence upon notification by the Contracting Officer. DLA Troop Support shall be provided a copy of the changes.

f. The manufacturer of the thermostabilized entrees (subcontractor) is required to provide the assembler (prime contractor) with certification/verification that the entrees have completed and passed appropriate incubation testing.

g. In lieu of performing the examinations and tests cited in the Quality Assurance Provisions of ACR-M-032 and the Supplemental Information for MIL-PRF-44073 (i.e. those examinations

and tests not excepted in part or in whole by Sections E-3 and E-4, below), the contractor may offer a Certificate of Conformance (COC) as verification of conformance to the Quality Assurance Provisions of ACR-M-032, the Supplemental Information for MIL-PR.F-44073, and traceability of finished product and components. The Government Quality Assurance Representative may accept the assemblers COC as verification of the examinations and tests contained in the Quality Assurance Provisions of ACR-M-032, the Supplemental Information for MIL-PRE-44073, and the traceability requirements, except as noted in section E-3, and E-4. The Certificate of Conformance (CoC) shall accompany each shipment of assembled product. The CoC shall identify the lots in the shipment and shall contain a statement that the involved lots are in compliance with the requirements of this solicitation and contract.

E-3. EXCEPTION TO PARAGRPAH E., C., (4) OF ACR-M-032

Applicable to HDR only, delete paragraph E., C., (4) Assembled meal bag examination of ACR-M-032 and insert the following:

> The Government shall perform inspection at origin in accordance with the following: Assembled meal bag examination for HDR. The filled and sealed meal bags shall be inspected for the defects listed in Table I. The lot size shall be expressed in bags. The sample unit shall be one filled and sealed meal bag. The inspection level shall be S-4 and the AQL expressed in terms of defects per hundred units shall be 2.5 for major defects and 6.5 for minor defects. A minimum of 50 samples shall be examined for critical defects. The finding of any critical defect shall be cause for rejection of the lot. The sample meal bags shall be selected from shipping containers which have been filled, sealed, sleeved, and strapped. The inspection sample shall contain a proportionate amount of each of the menu numbers.

NOTE- Samples examined by the Government shall be separate samples from those examined by the contractor in performing the inspection requirements of the applicable QSP. See Paragraph E-2-e. above.

TABLE I: HDR Meal Bag and Component Bag Defects:

CATEGORY:
CRITICAL MAJOR MINOR DEFECTS:

1 Tear, hole, or puncture through carton or open carton causing a hole in the pouch or obviously wet or stained carton due to leaking pouch 1/

2 Swollen pouch or carton of thermostabilized items
101 Tear or hole in carton exposing pouch to potential damage 2/
102 Menu component missing or incorrect assortment for menu package
103 Foreign odor
104 Not clean - the meal bag or any of the outer packaging of its contents 3/
105 Labeling missing, incorrect, or illegible (meal bag)
106 Labeling missing, incorrect, or illegible for thermostabilized component packaging
107 Tear, hole, puncture, or open seal in non- thermostabilized component packaging 4/
108 Crushed or broken cracker 5/
109 Broken spoon
201 Meal bag labeling missing, incorrect, or illegible. This includes the following:

1) The meal name **"HUMANITARIAN DAILY RATION."**
2) The food gift statement, " **FOOD GIFT FROM THE PEOPLE OF THE UNITED STATES OF AMERICA"**
3) The statement, "Menu number packed"

202 Tear, hole, open seal, or split in meal bag
203 Thermostabilized flaps open or tear or hole in carton not exposing pouch to potential damage.
204 Pictorial utilization instructions missing for thermostabilized and/or non- thermostabilized components
205 Labeling (nomenclature & lot #) missing, incorrect or illegible for non- thermostabilized components

1/ Applies to cartoned items.
2/ A tear and/or hole shall not he of a size that will impede the integrity of the carton to protect the pouch.

3/ Outer packaging shall be free from foreign matter which is unwholesome, has the potential to cause package damage (i.e. glass, metal fillings, etc.), or generally detracts from the clean appearance of the package. The following examples shall NOT be scored as defects for unclean:

a. Foreign matter which presents no health hazard or potential package damage and which can be readily removed by gently shaking the package or by gently brushing the package with a clean dry cloth.

b. Localized dried product which affects less than 1/8 of the total surface area of one pouch face, or an aggregate of scattered dried product which affects less than 1/4 of the total surface area of one pouch face.

c. Water spots.

d. Very thin film of grease, oil, or product residue which is discernible to touch, but is not readily discernible by visual examination.

4/ Starting at seal rim to form a continuous 1/16 inch seal completely closed and void of air gaps.

5/ Examination for crushed product shall be performed on closed component bags. A bag containing crushed, or broken crackers shall be indicated by any bag that contains a cracker less than the nominal dimension (minus 1/4 inch) in length or width (indicating crushing of the length or width); that has any depression (other than docker holes or serrations) when the bag is passed through the fingers while exerting sufficient finger grip pressure to feel the serrated areas (indicating crushing in thickness); that has movement of the cracker particles felt through the hag (indicating broken or crushed crackers).

E-4. EXCEPTION TO PARAGRAPH E., D., (1) of ACR-M-032

For the purpose of acceptance at origin, paragraph E., D., (1) Shipping container and marking examination shall be verified by the assembler's certificate of performance and by examination of the shipping containers for compliance with the marking requirements of DLA Troop Support FORM 3556 and additional requirements as given in Technical Data for Humanitarian Daily Ration, Section D, subsection D-4 Marking, using ANSI/ASQC Z1 .4. The following sampling plan applies:

The lot size shall be expressed in shipping containers. The sample unit shall be one shipping container fully packed. The inspection level shall be S-2 and the AQL expressed in terms of defects per hundred units shall be 4.0 for major defects and 10.0 for total defects.

NOTE: For the purposes of COC verification and/or Warranty inspection by the Government, the provisions of paragraph E., D., (1) Shipping container and marking examination apply in full.

E-5. Traceability Requirements

The ration assembler shall maintain records identifying the menu components used in packing and assembling each end item lot. These records shall maintain traceability of components to the extent that a lot and contract number of a component can be traced to an assembled end item lot. The system should also enable the assembler to list component contract numbers and lots within a particular end item lot. The assembled end item lot, usually one day's production, shall be clearly identified on the exterior of each case. In addition, the ration assembler shall maintain records of when and where assembled end item tots for a particular assembly contract have been shipped. The ration assembler shall provide the AVI (Army Veterinary Inspector) with a copy of the lot traceability records prior to shipment of each assembled lot. The following non-food items are exempt from traceability requirements: hand cleaner, matches, spoons and toilet tissue.

The purpose of the above is to maintain traceability of a component lot through the assembly operation. in depot storage and up to the customer's receipt of the MRE/HDR ration. This is necessary in the event of a recall/ALFOODACT for DLA Troop Support to isolate suspect product in the depot system and to notify customers of potentially hazardous product.

In addition to the manual system described above, the ration assembler shall input traceability data on a daily basis into the computerized program. The ration assembler will input all traceability data daily and provide a hard copy print out to veterinary personnel on a daily basis.

E-6. Traceability Examination
No finished product traceability examination is required. See E-2-g.

<u>SECTION J REFERENCE DOCUMENTS</u>

See Section J Reference Documents contained in Technical Data Package for Meal, Ready-to-Eat